INSTRUCTION MANUAL

FT-101E
FT-101EE
FT-101EX

YAESU MUSEN CO., LTD.

TOKYO JAPAN.

TABLE OF CONTENTS

GENERAL DESCRIPTION ..... Page 1
SPECIFICATIONS ..... Page 2
INSTALLATION ..... Page 3
(A) BASE STATION
(B) MOBILE STATION
CONTROLS & SWITCHES ..... Page 6
OPERATION ..... Page 9
CIRCUIT DESCRIPTION ..... Page 12
(A) BLOCK DIAGRAM
(B) TUBE & SEMICONDUCTOR COMPLEMENT
(C) CIRCUIT BOARD DESCRIPTIONS
(D) CRYSTAL CALCULATIONS
(E) CW FILTER
ALIGNMENT INSTRUCTIONS ..... Page 21
RESISTANCE-VOLTAGE CHART ..... Page 30
PART LIST ..... Page 32

Regarding the difference of models FT-101E, FT-101EE and FT-101EX, please refer to the following comparison list. Other specifications are all the same in three models.

	FT-101E	FT-101EE	FT-101EX
160m Band Crystal	O	O	X
80m " "	O	O	O
40m " "	O	O	O
20m " "	O	O	O
15m " "	O	O	O
10mA " "	O	O	X
10mB " "	O	O	O
10mC " "	O	O	X
10mD " "	O	O	X
AUX	X	X	X
WWV/JJY* "	O	O	X
Marker "	O	O	O
CW Filter	X	X	X
RF Processor/FIX Unit	O	X	X
DC-DC Converter	O	O	X
Cooling Fan	O**	O**	X
Microphone	O	O	O

O = Installed.
X = Not installed. (available as option)
* = Receive only.
** = Not installed in the U.S.A. and Canadian models.
AUX = Any 500 kHz coverage between 14.5–28.0 MHz.

This manual is revised for the units produced starting with Lot No. 024 and the lots produced subsequently.

Copyright of
Yaesu Musen Co. Ltd.

SSB TRANSCEIVER

GENERAL DESCRIPTION

The model FT-101E/277E SSB Transceiver is a precision built, compact high performance transceiver of advanced design providing SSB (USB, LSB selectable), CW and AM modes of operation. The transceiver operates at an input of 260 watts SSB, 180 watts CW and 80 watts AM on all bands 160 to 10 meters.

All circuits, except the transmitter driver and linear amplifier, are transistorized and composed of standard computer type plug-in modules, permiting easy maintenance.

The transceiver is self-contained, requiring only an antenna and an A.C. mains for home, portable or mobile operation. The transceiver may be operated from 100/110/117/200/220/234 volts AC when appropriately wired but is normally supplied for 117 volt AC and 12 volt DC operation. The two-way solid state power supply is an integral part of the unit. Two power cords are provided with the transceiver. Selection of AC or DC power source is automatically made when the proper line cord plug is inserted.

For mobile operation a separate switch is provided on the front panel to turn off the tube heaters while in the receive mode. In this mode the transceiver draws only 0.5 amp. less than your auto dash lights.

All accessories, such as VOX, break-in CW with side-tone, 25 and 100 KHz calibrators, noise blanker, 10 MHz WWV are built-in. In addition , dual VFO adaptor, crystal control adaptor, speaker and clarifier are integral parts of the unit. Provision is made for the installation of 600 Hz crystal filter for the expert CW-DX operator. The CW filter is selected automatically when the transceiver mode switch is placed in the CW position.

The entire transceiver weighs approximately 30 pounds, is 13 1/2" wide, 6" high, 11 1/2" deep. Construction is of heavy-gauge steel which provides an extremely rugged package, virtually immune to the effects of vibration and shock.

The SP 101PB/277PB combination phone patch and external speaker, is a valuable optional accessory for base operation. The unit features an elliptical type speaker for high quality voice reproduction. Other optional equipment includes the FV-101B/277B external VFO and mobile mounting brackets.

SPECIFICATIONS

Frequency Range	**1.8~29.9 MHz amateur bands, (160 thru 10m)** 10~10.5MHz Receive only
Type of Emission	USB or LSB (selectable) CW, AM
Power Input	SSB 260 Watts PEP CW 180 Watts 50% duty cycle AM 80 Watts (slightly lower on 10 meters)
Carrier Suppression	50 db
Sideband Suppression	50 db at 1000 Hz
Spurious Radiation	Down 40 db or more
Transmitter Frequency Response	300 Hz - 2700 Hz ± 3 db
Distortion Products	Down 30 db or more
Antenna Output Impedance	50 - 75 ohm unbalanced
Frequency Stability	Less than 100 Hz drift in any 30 minute period
Sensitivity	0.3 uV S/N 10 db
Selectivity	(2.4 KHz at 6 db) (4.0 KHz at 60 db) SSB, AM, CW (600 Hz at 6 db) (1.2 KHz at 60 db) CW filter (option)
Audio Output	3 Watts
Power Consumption	AC Receive 45 Watts Transmit 350 Watts Max. DC 12V Standby 0.6 Amp. Transmit 21 Amps. Max.
Dimensions	13 1/2" wide, 6" high, 11 1/2" deep
Weight	Approx. 30 Pounds

INSTALLATION

The transceiver is designed to provide a complete single unit installation for fixed, portable, or mobile operation. Two prewired plugs are furnished with the unit for AC or DC operation. This system provides the flexibility required for various installations and allows rapid change from fixed to mobile operation.

Base Station Installation ;

The transceiver is designed for use in many areas of the world using supply voltages that may differ from the operators local supply voltage. Therefore, before connecting the AC cord to the power outlet, be sure that the voltage marked on the rear of the transceiver agrees with the local AC supply voltage.

CAUTION

Permanent damage will result if improper AC supply voltage is applied to the transceiver.

The transceiver should be connected to a good ground. The ground lead should be connected to the terminal marked GND located on the rear panel of the transceiver.

Mobile Installation ;

The transceiver will operate satisfactorily from any 12 volt negative-ground battery source by connecting the DC power cord to the rear panel receptacle. For under-dash mounting, a special mounting bracket is available from your dealer. A location should be selected clear of heater ducts. No special mounting precautions need be observed if adequate ventilation space is available. A minimum of two inches of air space above the cabinet top and on all sides is recommended to allow proper air flow around the cabinet. Never stack other units above or below the cabinet since the accumulated heat from both units could cause permanent damage.

The transceiver requires an average of 14 amps on transmit and 20 amps on voice peaks. The fuse in the DC power cable should be rated at 20 amps. When making connections to the car battery, be certain that the RED lead is connected to the positive (+) terminal and the BLACK lead to the negative (−) terminal of the battery. Reversed connections could permanently damage the transceiver. The BLACK lead should run directly to the negative terminal of the battery. Using the car frame as a negative connection or connecting the positive lead at a point such as the ignition switch places the devices creating noise in the same current path as the transceiver and fails to take advantage of the filtering action of the battery. The power cable should be kept away from ignition wires and be as short as possible to minimize voltage drop and to provide a low impedance path from the transceiver to the battery.

Prior to operating the transceiver in a mobile installation, the voltage regulator setting should be checked. In many vehicles, the voltage regulations is very poor and in some cases, the regulator may be adjusted for an excessively high charging voltage. As the battery and regulator age, the maximum voltage while charging can increase to a very high level which is injurious to the battery and could cause damage to the transceiver.

The transceiver is designed to operate from a source voltage range of 11 to 14 volts. It is necessary to carefully set the regulator so that the highest charging voltage does not exceed 14 volts. The transceiver should be switched "OFF" when vehicle is started to prevent voltage transcients from damaging power supply transistors.

Antenna ;

CAUTION

Never transmit without having proper antenna or dummy load connected to the transceiver

The transceiver is designed for use with resonant antenna having an impedance 50 - 75 ohm resistive load.

The antenna is usually the most critical part of a station installation. Results both in receiving and transmitting will depend on how well the antenna is installed and adjusted. Any of the common antenna systems designed for use on the high frequency amateur bands may be used with the transceiver, provided the input impedance of the antenna system is within the capability of the transceiver pi-matching network (50-75 ohms).

If a tuned open wire transmission line, or a long wire antenna is used, a suitable antenna tuner must be used between the antenna and the transceiver to provide an impedance match between the unbalanced coaxial output of the transceiver and the balanced open-wire feeder or long wire.

For mobile operation, most of the commercially available antennas on the market will give good results with coaxial cable is securely grounded to the chassis of the vehicle at the antenna mount. Adjust the antenna length carefully for minimum SWR after installation.

INTERCONNECTIONS

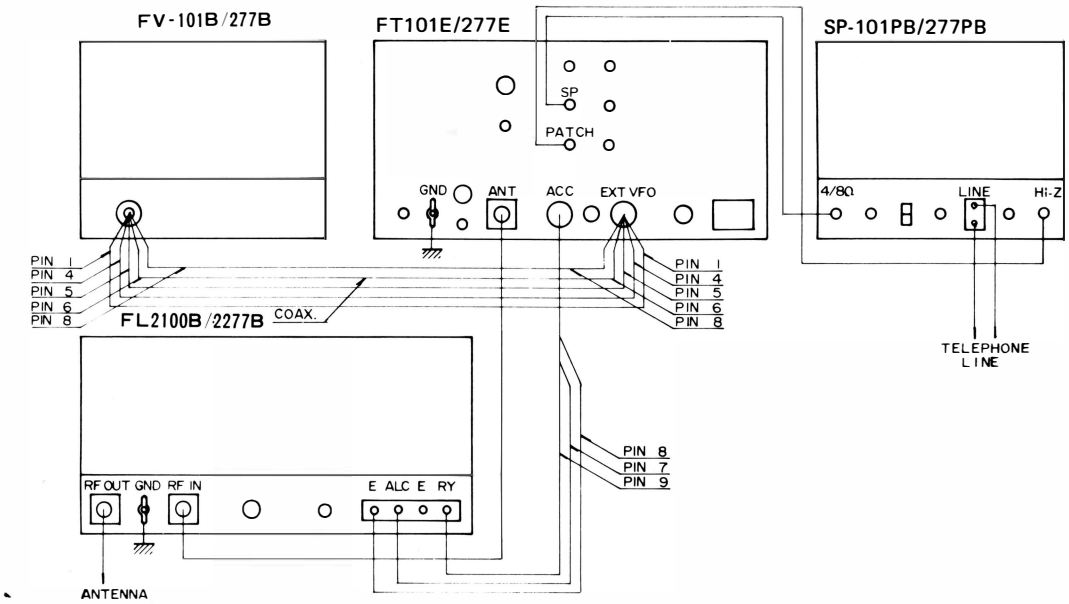

INTERCONNECTION DIAGRAM

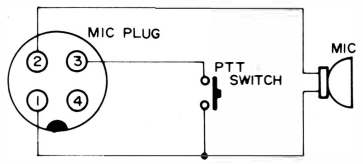

MICROPHONE CONNECTION

WARNING

SERIOUS DAMAGE MAY RESULT TO THE INVERTER TRANSISTORS IF POWER PLUG OTHER THAN THOSE SUPPLIED WITH THE UNIT ARE UTILIZED.
CINCH JONES OR OTHER SIMILAR U.S.A. VERSION CONNECTORS WILL FIT, HOWEVER THE PIN NUMBERING SYSTEM IS DIFFERENT.

FTV-250/FTV-650B
(2/6 METER TRANSVERTER)

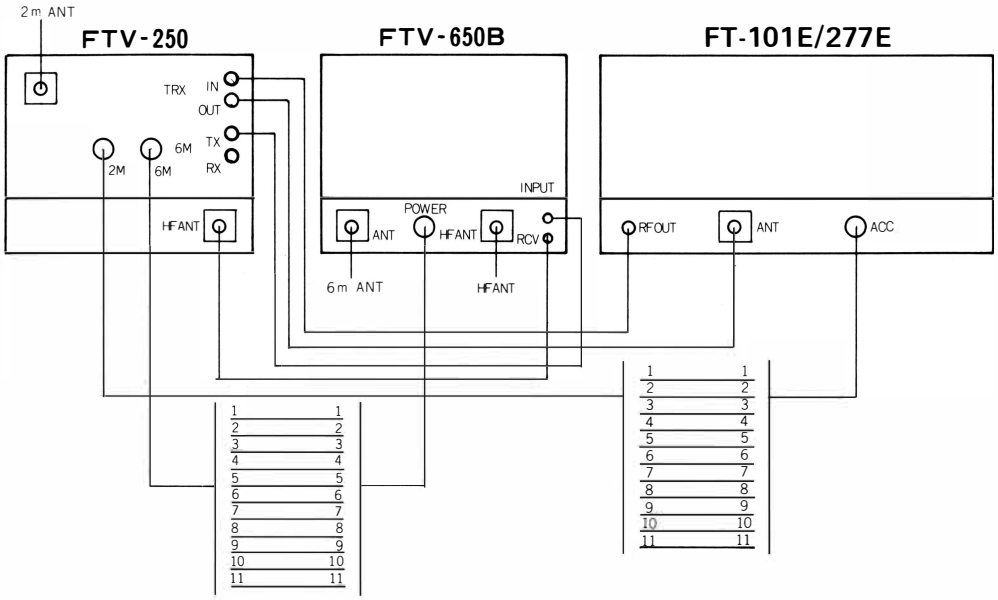

CONTROLS AND SWITCHES

The transceiver has been specifically designed for ease of operation and versatility. All controls have been preset at the factory. Several of the controls are unusual in operation, and improper adjustment may result in signals of poor quality. The various front panel controls and their functions are described in the following section. Be certain that you understand thoroughly the function of each control before operating the transceiver.

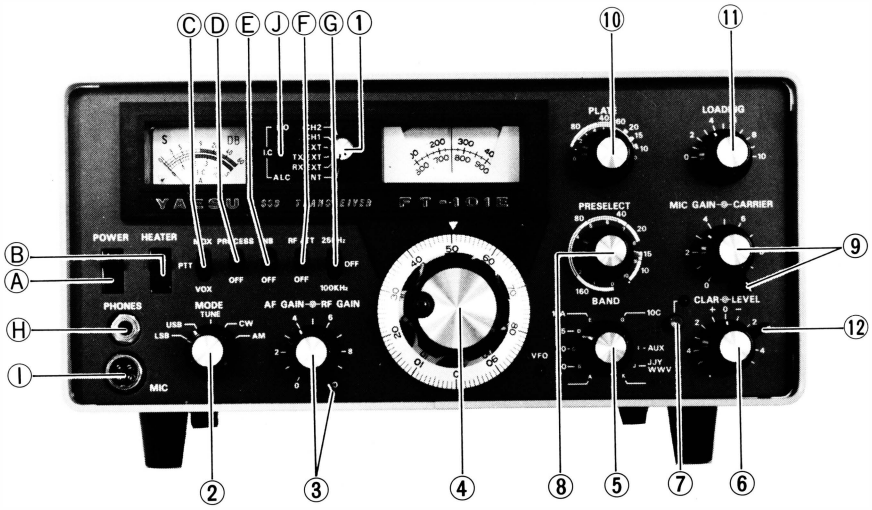

(1) VFO Select Switch ;

This switch provides selection of the companion FV-101B external VFO or two fixed crystal oscillator positions. Normal operation of the transceiver VFO requires that the switch be placed in the "INT" position.

INT-- FT-101E/277E VFO controls both transmitter and receiver frequencies.

RX EXT--FV-101B/277B EXTERNAL VFO controls the receiver frequency and the FT-101E/277E VFO controls transmitter output frequency.

TX EXT--FV-101B/277B EXTERNAL VFO controls the transmitter output frequency and the FT-101E/277EVFO controls the receiver frequency.

EXT-- FV-101B/277B EXTERNAL VFO controls both transmitter and receiver frequencies.

CH1, CH2--Provides crystal control of the transceiver. Proper crystals must be installed on PB1534 crystal oscillator board, for crystal controlled operation.

(2) MODE Switch; (LSB-USB-TUNE-CW-AM)

The MODE switch is a five-position switch. This switch is used to select the mode of operation; LSB, USB, AM, CW, or TUNE position. In the AM, CW and TUNE position, a separate crystal is used to shift the carrier frequency into the filter passband.

(3) RF GAIN/AF GAIN ;

The RF GAIN and AF GAIN controls are mounted on concentric shafts. RF GAIN control (lever control) varies the gain of the receiver RF and IF amplifier. Maximum sensitivity is obtained with the control set at 10 (fully clockwise).

The AF GAIN control (round knob) adjusts the audio output level at the speaker and phone jack. Clockwise rotation increases the audio output.

(4) Tuning Knob

The tuning knob located directly below the main dial window in combination with the band switch determines the actual frequency of operation.

The VFO drive mechanism consists of a precision spring loaded split gear system in combination with a planetary drive unit to provide zero backlash at low tuning rates. Each revolution of the tuning knob results in a frequency change of 16 KHz as indicated on the skirt surrounding the tuning knob.

(5) BAND Switch ;

The band switch is an eleven-position switch used to select the desired band for receiving or transmitting. The band indication is color coded to guide the operator selecting in the proper frequency scale for each band.

(6) (7) CLARIFIER ;

The clarifier control provides a means for tuning the receiver frequency 3 KHz to either side of the transmitting frequency. Thus, it is possible to set the pitch of the voice you are receiving to the

most readable point without affecting your transmitting frequency. Its use is particularly valuable in "net" operation where several participants may be transmitting slightly off frequency. The clarifier control functions with the clarifier switch (7) set to the push-down position, and a red warning lamp lights up. With the clarifier switch out position, the red lamp turns off and the receiver is locked to the transmitting frequency.
Normally, you will want to keep the clarifier in the OFF position until the initial contact is made. The clarifier control may then be used to zero-in and correct the any drift on the received signal.

(8) PRESELECT ;
This control pretunes the signal circuits for both transmit and receive. The preselect circuit provides continuous permiability tuning throughout the frequency range of the transceiver.

(9) MIC GAIN/CARRIER ;
The MIC GAIN/CARRIER controls are mounted on concentric shafts. The carrier control (lever control) varies the amount of the carrier in the CW, AM and TUNE modes of operation.
The MIC GAIN control (round knob) varies the audio level from the microphone amplifier stage. The control has sufficient range to permit the use of any high impedance crystal or dynamic microphone. Both controls have maximum gain with the control set at 10 (fully clockwise).

(10) PLATE ;
Tunes plate circuit of the final amplifier.

(11) LOADING ;
Tunes the output circuit of the pi network to match antenna and feed line impedance.

(12) LEVEL
This controls the output level of the RF processor with the RF processor on.

(A) POWER
Main switch turns transceiver "ON" for both AC and DC operation.

(B) HEATER
With this switch in the down position, the transmitter tube heaters are turned off. This reduces battery drain to 0.5 amp and thus permits long periods of listening without excessive battery drain. Pushing the rocker switch to the upper position provides supply voltage to the tube heaters. After a 30 second warm-up, the transmitter is ready for operation. This switch operates in both DC and AC modes.

(C) MOX-PTT-VOX (FUNCTION SWITCH)
This slide switch selects desired transmitter mode for both microphone and key operation.

MOX-(Manual transmit switch position)
Locks transmitter "ON" and must be returned to PTT position for receiver recovery.

PTT-(Push-to-talk)
Locks transmitter "ON" when microphone switch is depressed. Receiver recovers automatically when microphone switch is released.

VOX-(Voice operated transmit or break-in CW operation)
This switch position allows the operator to actuate the transmitter by simply speaking into the microphone. Receiver recovers automatically when the operator stops speaking.
For break-in CW, the VOX system will actuate the transmitter each time the key is depressed, and receiver recovers each time key is released.

(D) PROCESS
RF speech processor is placed into the circuit to increase the modulation power with this switch ON position.

(E) NB (NOISE BLANKER)
In upper position, the noise blanker is placed in the circuit and eliminates noise pulses caused by auto ignition.

(F) RF ATT (RF Attenuator)
This switch provides insertion of a 20 db attenuator in the incoming signal path to minimize cross modulation which may be caused by extremely strong local signals.

(G) 25 KHz/100 KHz (CALIBRATOR)
The 100 KHz crystal oscillator is used to calibrate the receiver. In the 25 KHz position, the 25 KHz multivibrator generates a marker signal at each 25 KHz point on the dial. Clarifier control must be in the "OFF" position when setting calibration.

(H) PHONES
Headphone may be inserted in this jack for private listening. The internal speaker is disconnected when the headphone plug is inserted. Any high quality head phone may be used.

(I) MIC
Microphone Jack. Four pin connector is used for microphone input, and push to talk relay actuation.

(J) METER
Selects the meter mode to read PA cathode current (I.C.), relative power output (PO), or ALC feedback voltage. Lower meter scale is calibrated 0 to .5 amp. Example: .25 = 250mA

PEAR APRON CONNECTIONS AND CONTROL

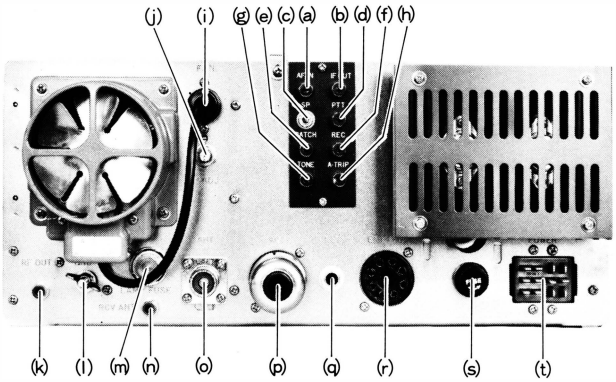

(a) AF-IN ;
Audio input jack for auxiliary station equipment. An FM detector unit, or a high level microphone, may be applied at this point for audio output from the transceiver speaker.

(b) IF OUT ;
3180 KHz IF signal is available from this jack for use with other station equipment such as panoramic adapter, etc.

(c) SP ;
Audio output is provided at this jack for an external speaker. Output impedance is 4 ohms and the internal speaker will be disabled when plug is inserted.

(d) PTT ;
This jack may be used for external actuation of the transmitter. As an example, a foot switch may be inserted into this jack to provide remote control of the transmitter PTT relay.

(e) PATCH ;
Speech input terminal for phone patch connection. Impedance is 50 K ohms.

(f) REC ;
This jack is connected to the receiver output (4 ohms) to be used for phone patch or other use.

(g) TONE ;
Sidetone output for additional receiver if used.

(h) A-TRIP ;
Anti-trip input from additional receiver if used.

(i) FAN ;
Power outlet for cooling fan.

(j) P.O. ADJUSTMENT;
Meter sensitivity adjustment for relative power output indication.

(k) RF OUT;
Signal frequency output from the driver stage may be obtained at this jack for use of optional equipment, such as the FTV-650B and FTV-250 6 and 2 meter transverters.

(l) GND ;
Ground connection.

(m) LAMP FUSE ;
This lamp fuse protects the RF amplifier transistor from damage which may be caused by extremely strong local signal.

(n) RCV ANT ;
Other receiver can be used through this Jack.

(o) ANT ;
Coaxial connection for antenna.

(p) ACC ;
Accessory socket. Provides access to transceiver operating voltages and relay contacts at this outlet.

(q) KEY ;
Key jack for code operation.

(r) EXT VFO ;
Connections for external VFO.

(s) FUSE ;
Fuse holder requires 5 amp fuse for 117 volt or 3 amp fuse for 220 volt operation. D.C. power cord fuse 20 amp.

(t) POWER ;
Power receptacle. Both AC and DC cables are supplied.

OPERATION

The tuning procedure of the transceiver is not complicated, however, care should be exercised when tuning to insure peak performance of the equipment. The following paragraphs describe the procedure for receiver and transmitter tuning.

INITIAL CHECK

Before connecting the transceiver to a power source, carefully examine the unit for any visible damage. Check that all modules and crystals are firmly in place and that controls and switches are operating normally. Ensure that voltage specification marked on rear panel matches the supply voltage.

FREQUENCY SELECTION

The main tuning dial is color coded with the band selector switch for proper frequency read out. When band selected is marked in Red, the operator reads the Red numbers on the main tuning dial. When for example the band selected is marked in White on transceiver front panel, the operator reads the Black numbers on main tuning dial.

The main tuning dial is marked in 25 KHz increments between each 100 KHz segment. This provides a course frequency setting within the band. The dial skirt surrounding the tuning knob is marked in 1 KHz increments and provides for fine settings of the transceiver operating frequency.

Following the example shown, familiarize yourself with the relationship of main and skirt dial frequency readout.

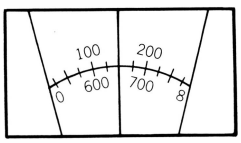

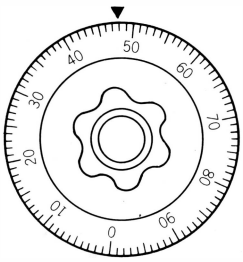

For bands 40-20-15-10A-10C read Black scale on main dial. Setting shown in the example would then be 148 KHz plus the starting band edge frequency in MHz. For example, on 40 meters the frequency would be 7.148 MHz. On 20 meters, 14.148 MHz, etc.

For bands 160-80-10B-10D read Red scale on main dial. Settings shown in the example would then read 648 KHz For example, on 80 meters the frequency would be 3.648 MHz, on 10B, 28.648 MHz, etc.

RECEIVER CALIBRATION ;

Preset the controls and switches as indicated ;

VFO Selector ..... INT (internal)
MOX-PTT-VOX ..... PTT
POWER ..... ON (upper position)
RF GAIN ..... Maximum
AF GAIN ..... As required
BAND ..... Desired band
MODE ..... Desired mode
TUNING .....100 KHz point
PRESELECTOR ..... Desired band segment
CLARIFIER ..... OFF
RF ATT ..... OFF
CALIBRATOR .....100 KHz

To calibrate, set the TUNING control to the 100 KHz point on the dial nearest the desired frequency. Tune the preselector for maximum "S" meter deflection. Tune the transceiver to the 100 KHz calibrator signal for zero beat. Two signals may be heard near the 100 KHz point. One of these is a signal feeding through the IF stages. Always calibrate to the stronger of these two signals. To calibrate, hold tuning knob firmly at zero beat point and rotate skirt vernier dial to zero position. The skirt vernier dial surrounds the tuning knob and is held in position by a friction locking device. This dial is easily movable by hand but will retain its position after calibration. The transceiver must be calibrated when changing mode of operation of LSB, USB, AM or CW,

Switch the calibrator to the 25 KHz position and note that the calibrator signal can be heard at every 25 KHz point. The calibrator switch should be in the OFF position in normal use of the transceiver.

TRANSMITTER TUNE-UP

The following tune-up procedure must be performed prior to selection of desired operating mode, LSB, USB, CW, or AM. See paragraphs relating to the specific mode after basic transmitter tune-up.

Connect dummy load or matched antenna to the coaxial fitting on rear apron, and preset controls as follows :

POWER ..... OFF
HEATER ..... ON
MODE ..... TUNE
CARRIER ..... 0 (fully counter-clockwise)
BAND ..... Desired band
TUNING ..... Desired frequency
PRESELECTOR ..... Desired band segment
PLATE ..... Desired band segment
LOADING ..... To position shown in table
METER IC
VFO SELECT ..... INT
MOX-PTT-VOX ..... PTT

LOADING POSITIONS

BAND	LOADING
160	5
80	5
40	5 1/2
20	3 1/2
15	3
10A	4
10B	4
10C	4
10D	4

NOTE : Loading positions are nominal. Slight variations from positions shown are to be expected.

With the transceiver turned on, allow 60 seconds for warm-up of the transmitter tubes. Be certain that accessory plug is in the accessory socket. The heater voltage to the final tubes is supplied through pins 1 and 2 of the accessory plug.

Set the "MOX-PTT-VOX" switch to MOX position. Meter will now read Final Amplifier resting cathode current. **This should be set at .06 (60 mA) with the BIAS control located under the top cover near the rear of the set. Switch the meter to ALC position and adjust ALC control under the top cover for full scale deflection of the meter. Return meter switch to IC position and "MOX-PTT-VOX" switch to PTT position.**

PRE-TUNING

1. Adjust "PRESELECT" for maximum receiver noise level.
2. **Place "FUNCTION SWITCH" "MOX" position.**
3. Rotate "CARRIER" control arm until meter rises just above normal idling current. .06 (60 mA).
4. Adjust "PRESELECT" for maximum meter reading. (Caution: if meter exceeds .1 (100 mA), reduce "CARRIER")
5. Rotate "PLATE" control for minimum meter reading. (Plate Dip)
6. **Return "FUNCTION SWITCH" to PTT position.**

The transmitter is now pretuned to the desired frequency. Final peak tuning is accomplished by the following final tuning procedure.

FINAL TUNING

Final peak tuning utilizes the meter relative power output position (P.O.). At full transmit power the meter will read approximately one-half to two-thirds full scale into a matched antenna load. If during final tune-up it is noted that the meter indication exceeds full scale, discontinue tune-up. Off scale meter indications are the result of reflected RF due to high VSWR and corrective action should be taken before attempting final tune-up.

CAUTION

Exceeding the time limits noted during final tuning may result in destruction of final output tubes.

1. Set meter switch to P.O. position, rotate "CARRIER" control arm to position 4.
2. Momentarily set "FUNCTION SWITCH" to "MOX" (10 second maximum), and rotate "PRESELECT" control for maximum meter reading. Return "MOX" to PTT position.
3. Momentarily set "FUNCTION SWITCH" to "MOX" (10 second maximum) and rotate "LOADING" control for maximum meter reading. Return "MOX" to PTT position.
4. Momentarily set "FUNCTION SWITCH" to "MOX" (10 second maximum) and rotate "PLATE" control for maximum meter reading. Return "MOX" to PTT position.
5. Repeat steps 1 through advancing "CARRIER" control arm approximately two units each time until "CARRIER" control arm is fully clockwise (Position 10). The transmitter is now tuned for maximum output.

Return "CARRIER" control arm fully counter-clockwise to zero position. Return meter switch to IC position and MODE switch to desired operating mode.

NOTE: Moving the "FUNCTION SWITCH" to the "MOX" position in the above steps may be eliminated by simply operating the micro-

phone PTT switch when microphone is attached to the transceiver.

SSB OPERATION

After completion of tuning, set MODE switch to LSB or USB. Set the METER switch to ALC position. Set the "FUNCTION SWITCH" to the PTT position and advance the MIC GAIN control until the meter kicks down to midscale of green colored portion when speaking normally into the microphone.

Set the "FUNCTION SWITCH" to VOX position. For VOX operation, adjust VOX GAIN potentiometer under the top cover until voice actuates the transceiver. Set the ANTITRIP potentiometer to the minimum point to prevent the speaker output from tripping the VOX. Do not use more VOX gain or ANTITRIP gain than necessary. Adjust the DELAY potentiometer under the top cover for suitable release time.

NOTE : When meter is set to IC, voice modulation peaks will indicate 150-200 mA. Actual peak current, however, is approximately 2 times the indicated value.

CAUTION

CARE must be taken to avoid an excessive drive to prevent spurious radiation. Maximum key down current should be kept within 330 mA for the bands under 15 meter and 280 mA for 10 meter band.

VOICE OPERATION WITH RF PROCESSOR

The FT-101E Speech Processor, when properly adjusted, is designed to improve the intelligibility threshold at the receiving end with RF clipping. This highly clipped IF signal is filtered to remove RF harmonics and out of band intermodulation products.

The distortion produced by RF envelope clipping and filtering is less objectionable than that caused by an equivalent amount of audio clipping.

It should be noted that the RF Speech Processor does not increase maximum power output but clipps maximum peak to increase the output of low level signal as illustrated in Fig. 2, and the improvement of an RF Speech Processed Signal is most noticeable when the SSB signal is weak at a distant receiver.

With the PROCESS switch OFF, set the METER switch to ALC position. Normally speaking into the microphone, set the MIC GAIN control to the level where the meter indication stays in green portion of the meter scale. Set the PROCESS switch ON and adjust the LEVEL (processor output level) control to the position where the ALC indication stays in the green portion. Optimum setting of the MIC GAIN and LEVEL controls may need observation of the transmitted signal by the scope.

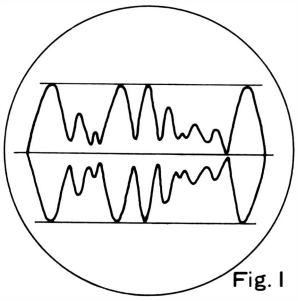

Fig. 1 RF Processor OFF

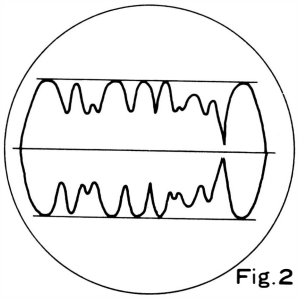

Fig. 2 RF Processor ON

CW OPERATION

Upon completion final tuning, insert key plug in jack marked "KEY" on rear apron of the transceiver. Power output from the transmitter is determined by the "CARRIER" control arm position. The operator may select any power output desired by simply rotating the "CARRIER" control within the limits of its range from zero to ten.

The transceiver may be operated manually or break-in by setting the "FUNCTION SWITCH" to either MOX (manual) or VOX (break-in) for the desired mode of operation.

NOTE : Insertion of the key plug automatically disconnects the bias supply to the PA tubes, therefore, with the key plug inserted Final Amplifier bias current will not be indicated when meter is in the IC position.

AM OPERATION

AM operation of the transceiver is accomplished by setting the MODE switch to the AM position and inserting the proper amount of "CARRIER" with the "CARRIER" control.

After completion basic transmitter tune-up, place the MODE switch in the AM position and rotate "CARRIER" control arm until meter reads .15 (150 mA) in the IC position. While speaking into the microphone normally, increase MIC GAIN until the meter indicates very slight movement with voice peaks.

Care must be taken in adjusting MIC GAIN control to assure that the "CARRIER" control arm is not rotated causing an increase in "CARRIER" level. Do not exceed .15 (150 mA) meter indication during AM operation or destruction of the Final Amplifier tubes may result.

CAUTION

On the 160 meter band, maximum plate current should be kept within 140mA to avoid spurious radiation when it is operated on the frequencies between 1820 KHz and 1900 KHz.

CIRCUIT DESCRIPTION

The block diagram and the circuit description that follows will provide you with a better understanding of this transceiver.

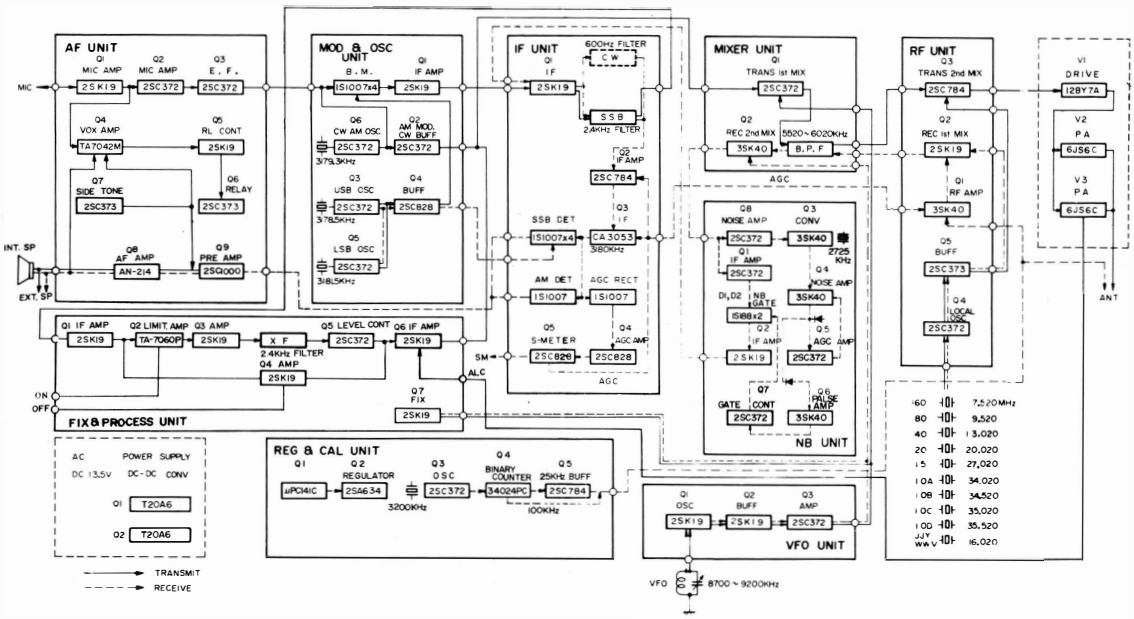

TUBE & SEMICONDUCTOR COMPLEMENT

HF Unit PB-1181(A-Z)

Q1	RF amplifier	3SK40M
Q2	Receiver 1st Mixer	2SK19GR
Q3	Transmitter 2nd Mixer	2SC784R
Q4	Local oscillator	2SC372Y
Q5	Buffer	2SC373

HIGH FREQUENCY IF Unit PB-1180 (A-Z)

Q1	Transmitter 1st Mixer	2SC372Y
Q2	Receiver 2nd Mixer	3SK40M

LOW FREQUENCY IF Unit PB-1183 (A-Z)

Q1	IF amplifier	2SK19GR
Q2	IF amplifier	2SC784R
Q3	IF amplifier	TA7045M
Q4	AGC amplifier	2SC828Q
Q5	S meter	2SC828Q

MODULATOR Unit PB-1184 (A-Z)

Q1	IF amplifier	2SK19Y
Q2	AM modulator	2SC372Y
Q3	USB oscillator	2SC372Y
Q4	LSB oscillator	2SC828P
Q5	CW-AM oscillator	2SC372Y
Q6	Buffer	2SC372Y

AUDIO Unit PB-1315 (A-Z)

Q1	MIC amplifier	2SK19GR
Q2	MIC amplifier	2SC372Y
Q3	Emitter follower	2SC372Y
Q4	VOX amplifier	TA7042M
Q5	Relay control	2SK19Y
Q6	Relay control	2SC373
Q7	CW side tone osc.	2SC373
Q8	AF amplifier	AN214
Q9	Pre amplifier	2SC1000GR

VFO Unit PB-1056 (A-Z)

Q1	VFO oscillator	2SK19GR
Q2	Buffer	2SK19GR
Q3	Amplifier	2SC372Y

NB Unit PB-1582 (A-Z)

Q1	IF amplifier	2SC372Y
Q2	IF amplifier	2SK19GR
Q3	Converter	3SK40M
Q4	Noise amplifier	3SK40M
Q5	AGC amplifier	2SC372Y
Q6	Pulse amplifier	3SK40M
Q7	NB gate control	2SC372Y

PROCESS FIX Unit PB1534 (A-Z)

Q1	Amplifier	2SK19GR
Q2	Limiter Amplifier	TA7060P
Q3	Amplifier (Process ON)	2SK19GR
Q4	Amplifier (Process OFF)	2SK19GR
Q5	Level Control	2SC372Y
Q6	ALC Amplifier	2SK19GR
Q7	Crystal Oscillator	2SK19GR

REGULATOR Unit PB-1547

Q1	Regulator	μPC141C
Q2	Regulator	2SA634
Q3	Crystal oscillator	2SC372Y
Q4	Marker amplifier	2SC784R

MAIN CHASSIS

V1	Driver tube	12BY7A
V2, V3	Final amplifier	6JS6Cx2
Q1, Q2	DC-DC convertor	T20A6

The transceiver is designed with computor type plug-in modules. These modules are: High frequency unit, High frequency IF unit, Low frequency IF unit, Audio unit, Modulator unit, Noise blanker unit and Power regulator unit. The VFO unit, Crystal oscillator unit and Rectifier unit are built into the main chassis.

(1) HF UNIT (PB1181B)

This module contains the receiver RF amplifier, receiver 1st mixer, transmitter 2nd mixer and heterodyne oscillator circuit. The signal from the antenna coil is fed to the gate of Q1 (field effect transistor **3SK40M**) through terminal 8 of the module.

The AGC (automatic gain control) voltage which is obtained from the low frequency IF unit, is applied to the gate circuit of Q1 from pin 9 to control the gain of this stage. A manual RF gain control on the front panel is connected to the source of Q1 through pin 10.
Signal output from the Q1 is then coupled to the receiver **1st** mixer Q2, **2SK19GR** where the incoming signal is mixed with a signal from the heterodyne oscillator Q4, **2SC372Y** through the buffer stage Q5, **2SC373**. The product of the first mixer is applied through pin 17 to the high frequency IF unit.

Transmitter signal is fed to the base of transmitter 2nd mixer Q3, **2SC784R** from pin 13. The signal from the heterodyne oscillator is applied to the emitter of the mixer Q3, through the buffer stage Q4, **2SC372Y**. This converts the high frequency IF signal to the desired transmitting frequency. This transmitting signal is fed to T102 through pin 11. The gate circuit of the receiver mixer Q2 is disconnected in transmit by diode switch to avoid the lowering the Q2 of the circuit. Crystal sockets and all coils are mounted on the main chassis.

(2) HIGH FREQUENCY IF UNIT (PB1180B)

The module contains the transmitter first mixer Q1, **2SC372Y**, the receiver second mixer Q2, **3SK40M**, and the 5520 to 6020 KHz bandpass network. The signal from the receiver 1st mixer is fed to the gate

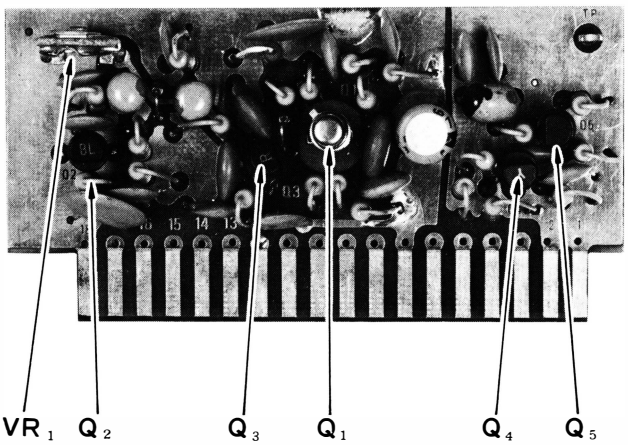

High Frequency Module (PB-1181)

of the mixer through the bandpass network L1, L2, and L3, from pin 15. VFO voltage is also applied to the 2nd gate of Q2 from pin 11. The signal is converted to 3180 KHz low frequency IF and fed to the following stage through pin 3 an output transformer T112A. On transmit, the 3180 KHz signal is fed to the base of the mixer, from pin 5. A 14 MHz trap coil T113 is connected to the base circuit of Q1. The VFO signal is fed to the emitter of the Q1 which produces the 5520 to 6020 KHz high frequency IF signal. This signal is fed to the following stage from pin 16 through the bandpass network.

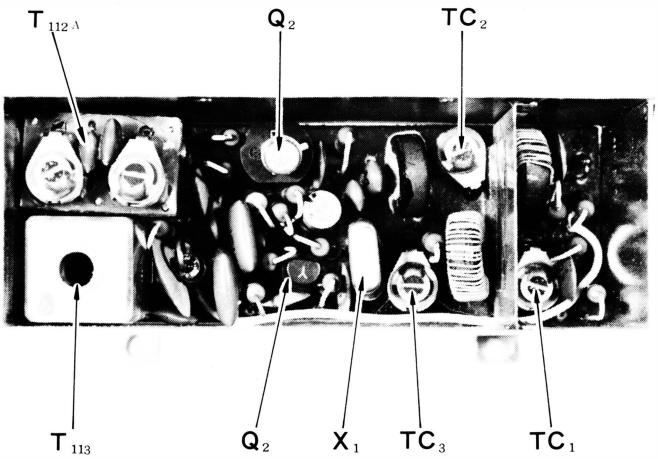

High Frequency IF Module (PB-1180)

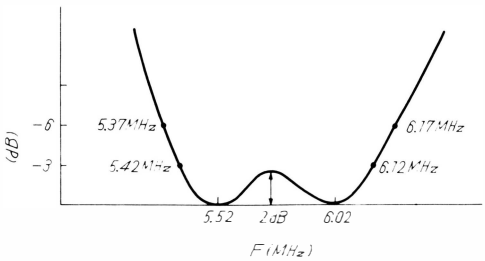

BANDPASS NETWORK CHARACTERISTICS

(3) LOW FREQUENCY IF UNIT (PB1183B)

This module contains the low frequency IF amplifier, crystal filter, detector and AGC/S meter circuits.

On receive, a 3180 KHz signal from the noise blanker circuit is fed to the gate of Q1 **2SK19GR,**FET from pin 15 of the module.

D1-D4 are diode switches which select the crystal filter for SSB or CW reception. The 600 Hz CW filter XF-30C is an optional feature available at additional cost from your dealer. The diode switch selects the CW filter automatically when the MODE switch is set to CW position. This control voltage is derived from pin 9 and 12. The signal from the crystal filter is fed to the base of Q2, **2SC784R** and is amplified by Q2 **and Q3, TA-7045M integrated circuit. The gain of these two stages is controlled automatically by the AGC voltage derived from AGC amplifier Q4, 2SC828Q. The gain is also controlled manually by the RF gain control on the front panel.**

The output from Q3 is fed through T109 to the ring demodulator D8-D11 for CW and SSB reception. The carrier signal is fed to the detector from pin 5. The carrier signal is balanced by VR1 to obtain minimum distortion and also to avoid S-meter reading which may be influenced by the carrier oscillator signal. The

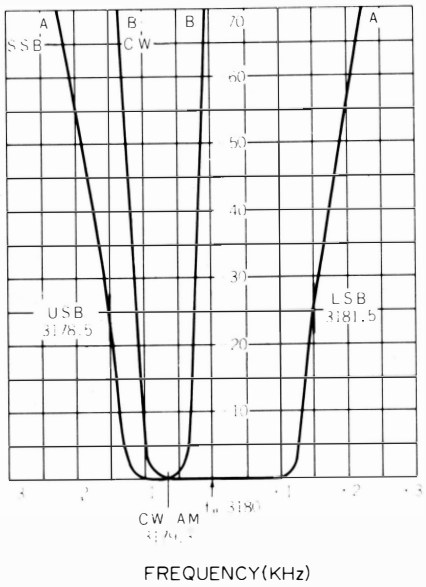

CHARACTERISTICS OF SSB/CW FILTERS

AM signal is detected by D7, **1S1007** and fed to the audio amplifier stage from pin 4 through the MODE switch. The detected audio signals are connected to audio amplifier unit from pin 4 (AM) and pin 6 (SSB & CW) through the MODE switch on the front panel and the pre-amplifier.

D5, **1S1007,** D6, **1S1555** AGC rectifiers drive the AGC amplifier Q4. The emitter of Q4 controls S-meter amplifier Q5, **2SC828Q.**

On transmit, the signal is applied to the gate of Q1 from pin 15. It is then amplified and passed through the crystal filter. The output from the crystal filter is applied to the high frequency IF unit from pin 10.

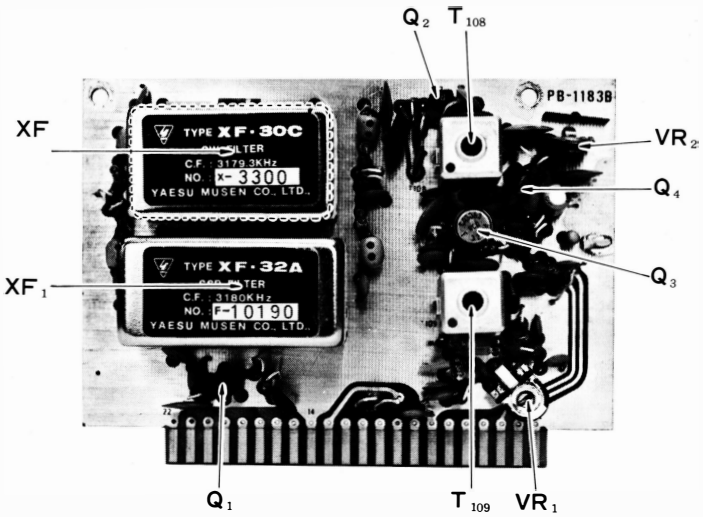

Low Frequency IF Module (PB-1183)

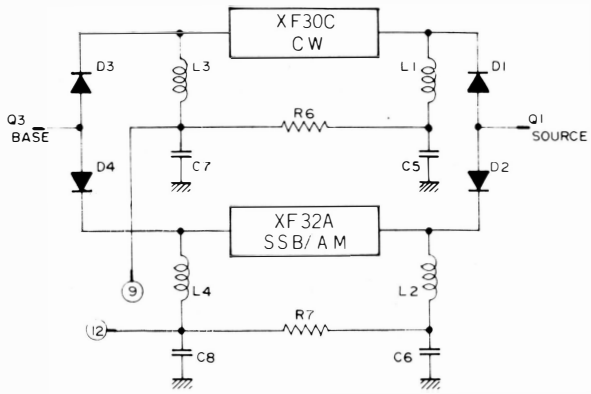

CW FILTER INSTALLATION DIAGRAM

(4) AUDIO UNIT (PB1315A)

This module contains the microphone amplifier, receiver audio amplifier, VOX amplifier and CW sidetone oscillator. A speech signal from the microphone is fed to the first MIC amplifier Q1, **2SK19GR** FET from pin 5. Input impedance of the MIC amplifier is 50 K ohms. The signal, controlled in amplitude by the MIC GAIN control between pin 3 and pin 4, is amplified by the second microphone amplifier Q2, **2SC372Y** and applied to the emitter follower Q3, **2SC372Y** to be delivered to the modulator unit from pin 8.

The receiver audio signal from the AUDIO GAIN control is applied through pin 19 to a pre amplifier Q9, **2SC1000,** and amplified by integrated circuit Q8, **AN214.** This stage, in turn, increases the signal to speaker level. The audio power amplifier circuit utilizes the OTL (output transformer less) circuit and delivers 3 watts output to the speaker through pin 22.

The signal from the first microphone amplifier is coupled through the VOX GAIN control potentiometer VR1 to VOX amplifier Q4, **TA7042M.** The signal amplified by Q4 is fed to the VOX rectifier. The positive DC output voltage of the rectifier is applied to the gate of the VOX relay control transistors Q5, **2SK19Y** and Q6, **2SC373** causing them to conduct and actuate the VOX relay RL1 on the main chassis. The collector circuit of Q6 is connected to RL1 through pin 13.

The ANTITRIP circuit provides a threshold voltage to prevent the speaker output from tripping the transceiver into the transmit function. The receiver audio VR5 to the antitrip amplifier Q4, and fed to rectifiers D1 and D2, **1S1555.** Negative DC output voltage from the rectifier, connected to the gate of Q5, reduces the gain of the VOX control transistor providing the necessary antitrip threshold. ANTITRIP control VR5 adjusts the value of the antitrip voltage threshold so that the loud speaker output will not produce excessive positive DC output from the VOX rectifier to exceed the negative DC output from the antitrip rectifier and cause the control transistor to actuate the relay. When speaking into the microphone normally the positive voltage will exceed the negative antitrip voltage and actuate the relay. VR3 provides course adjustment for relay sensitivity.

Relay hold time will be determined by DELAY control VR2.

The tone oscillator Q7, **2SC373** operates when the MODE switch is in CW position. It is a phaseshift oscillator operating at approximately 800 Hz. The tone output is activated by the keying circuit and coupled through SIDETONE LEVEL control VR4 to the receiver audio amplifier for sidetone monitoring in CW operation. The output from Q7 is also coupled to the VOX amplifier Q4 for break-in CW operation.

(5) MODULATOR UNIT (PB1184A)

The MODULATOR UNIT contains the carrier oscillators, the ring modulator circuit for SSB, and AM modulator. The carrier oscillator oscillates either 3178.5 KHz for USB or 3181.5 KHz for LSB, depending upon

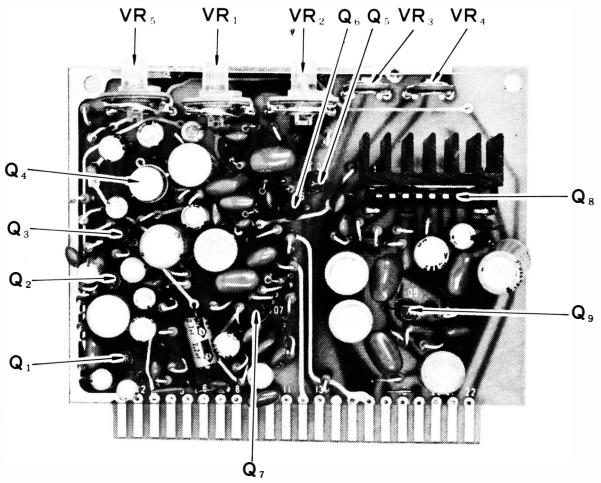

Audio Module (PB-1315)

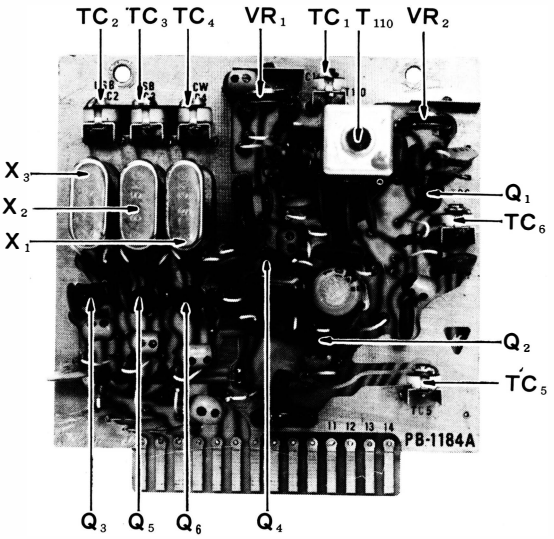

Modulator Module (PB1184)

whether Q3, **2SC372Y** or Q5, **2SC372Y** is selected by the MODE switch. The MODE switch disconnects the emitter circuit of either transistor when not in use. The output from the oscillator is fed to the buffer amplifier Q4, **2SC828P,** and then to the balanced ring modulator D1–D4. The carrier signal is also fed to the ring demodulator from pin 6 for receive. These crystal frequencies are matched to the bandpass of the crystal filter to place the carrier frequency approximately 25 db down on the skirt of the filter response.

For AM and CW operation, the 3179.3 KHz crystal controlled oscillator Q6, **2SC372Y** operates to produce the carrier signal, and Q3 and Q5 are disconnected.

Q2, **2SC372Y** operates as a modulator for AM operation and as a buffer stage for CW operation. The speech signal is fed to the balanced ring modulator and AM modulator Q2 from pin 9.

Carrier balance is obtained by a potentiometer VR1 and a trimmer capacitor, TC1 Double-sideband, suppressed-carrier output from the balanced modulator is amplified through T110 by the IF amplifier Q1, **2SK19Y,** and fed to the low frequency IF unit from pin 12. For AM and CW, the output signal from Q2 is fed to the high frequency IF unit, through CARRIER potentiometer VR2 on the front panel.

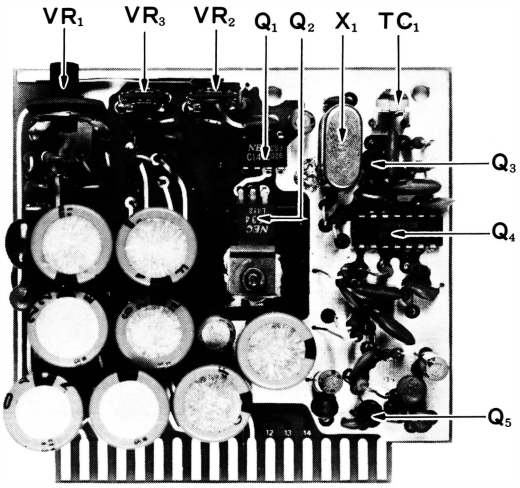

Power Regulator Module (PB-1547)

(6) POWER REGULATOR UNIT (PB1547)

The DC 13.6 volts from the rectifier unit is supplied through pin 14 to the voltage regulator circuit Q1, **μPC141C,** Q2, **2SA634** in this unit to obtain extremely stable 6 volt DC supply which is then fed to the various circuits from pin 13. The regulated voltage is supplied to the CLARIFIER control to offset the receive frequency ±3KHz either side of the transmitted signal. VR3 permits adjustment of controls to the receive and transmit frequency to coincide at the CLARIFIER zero or OFF position. A–100 volt negative voltage is delivered from pin 5 to the unit. VR1 sets the operating bias at approximately–50 volts for the final amplifier tubes. This bias voltage is–60 volts on receive and supplies the grid circuit of the final tubes on the main chassis from pin 2. The bias for the driver tube **12BY7A** is also supplied from pin 4. This voltage is–20 volts on receive and–3.5 volts for transmit.

The marker signal generator is included in the REG/CALIB unit, PB-1547. A crystal controlled oscillator Q3, **2SC372Y** oscillates at the 3200 KHz crystal frequency for dial calibration. A trimmer capacitor TC1 is used to calibrate crystal frequency against WWV or JJY.
Output from the oscillator is fed to a binary counter, Q4, **34024 PC** where the 3200 KHz signal is divided into 100 KHz and 25 KHz marker signal. 25 KHz signal is fed through diode switch, D4, **1S1555** which is operated by 25 KHz selector switch S9 to a buffer amplifier Q5, **2SC784R** where 100 KHz signal is added to 25 KHz signal.
Both 100 KHz and 25 KHz marker signal is fed to the receiver front end from pin 16 of the printed board.

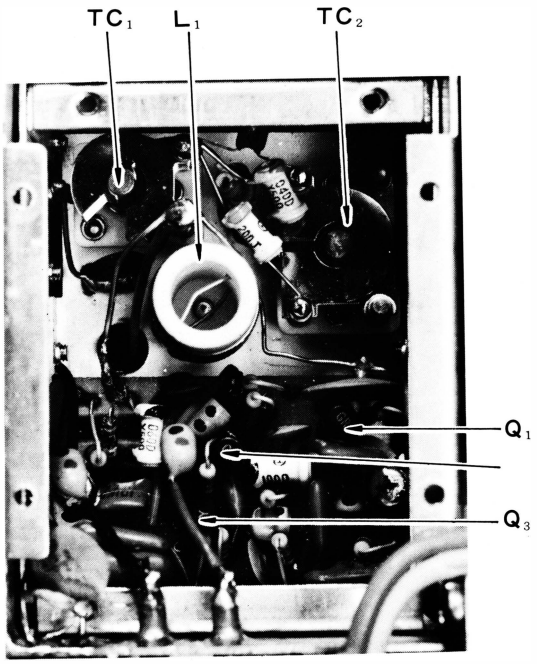

VFO Module

(7) VFO UNIT (PB-1056)

The VFO module board is installed in the VFO chassis. The VFO uses FET transistors Q1, **2SK19GR** and Q2, **2SK19GR** first buffer. Q3, **2SC372Y** buffer provides isolation and amplification of the VFO signal.

The VFO oscillation frequency is 8700 KHz to 9200 KHz and covers the tunable IF range of 500 KHz. Varactor diode D1, **1S2236** in series with capacitor C14 is switched into the circuit by the clarifier switch and the relay contacts to shift the VFO frequency for receiver offset tuning.

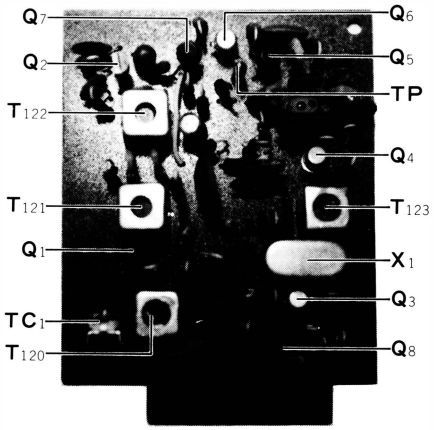

Noise Blanker Module (PB-1582B)

(8) NOISE BLANKER UNIT (PB-1292)

The 3180 KHz signal is fed through T120 to IF amplifier Q1, **2SC372Y**, and then fed through T121, noise blanker gate diode, D1 and D2, **1S188** FM and T122 to the second IF amplifier Q2, **2SK19GR.**

A portion of the input signal to the Noise Blanker unit is fed through noise amplifier Q8, **2SC372Y** to a first gate of mixer-oscillator Q3, **3SK40M.** The AGC voltage controls the gain of the noise amplifier Q8, to avoid saturation of Noise Blanker against an extremely strong noise, Q3 generates 2725 KHz crystal controlled signal which converts 3180 KHz signal into 455 KHz. 455 KHz signal is amplified by a noise amplifier Q4, **3SK40M.** The signal passed through C20 is rectified by an AGC rectifier D3, **1S188** FM, and the rectified DC voltage is amplified by Q5, **2SC372Y** in order to control the gain of Q4, **3SK40M.**

C22 is charged by the voltage rectified by D4, **1S188FM**, however, this voltage does not exceed the conducting voltage of diode D4, so that it does not bias the pulse amplifier Q6, **3SK40M** keeping Q6 in conduct with zero bias, in turn, blanker controller Q7, **2SC372Y** stays in non-conducting state with no noise pulses. As a result, noise gate diodes D1, D2, **1S188FM** connected in parallel with Q7 conduct and the signal passes through the diodes.

When noise pulse exists, the voltage across C22 causes D4 to conduct and Q6 turns into cutoff, in turn, Q7 conducts and D1, D2 is biased to cutoff preventing the signal passing from the diodes.

(9) CRYSTAL CONTROL/RF PROCESSOR UNIT (PB-1534)

This model is located on the VFO unit. The interconnection of the modules is wired directly without using plug-in socket.

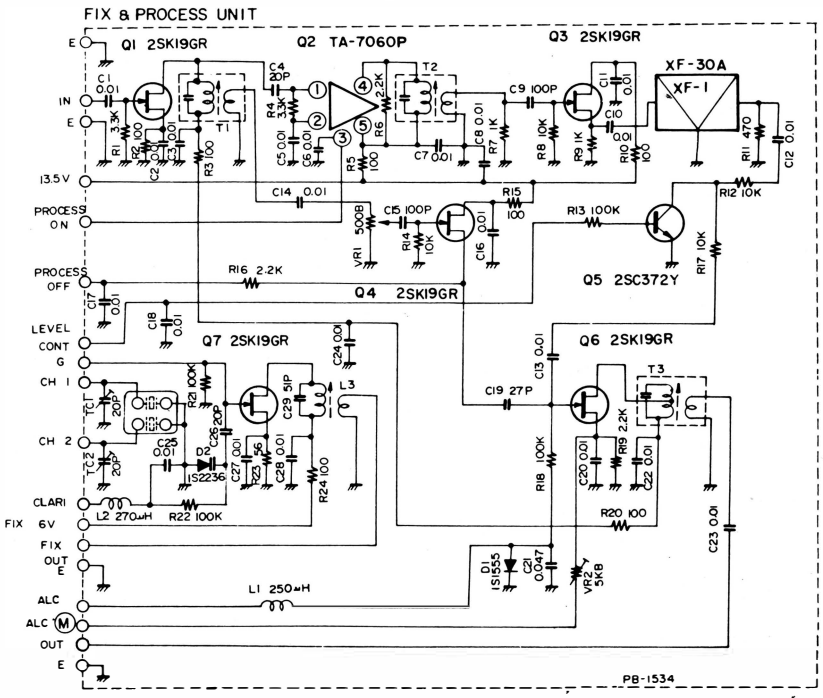

RF Speech Processor/Crystal Control Circuit Diagram (PB-1534)

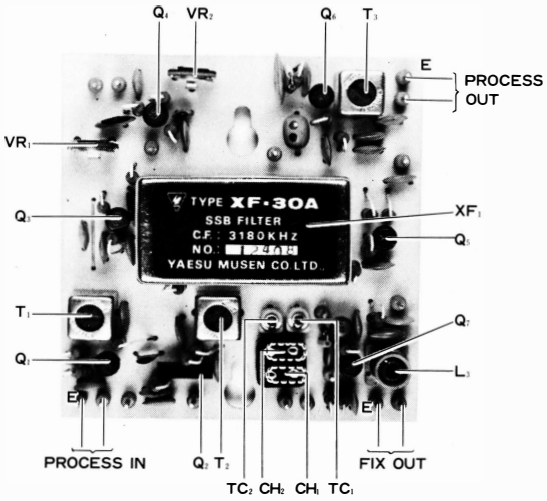

RF Speech Processor/Crystal Control Module (PB-1534)

CRYSTAL CONTROL

In addition to normal VFO operation, two crystals may be selected for crystal controlled operation by a selector switch located on the front panel of the transceiver.

RF PROCESSOR (PB-1534)

The SSB signal generated through the crystal filter is amplified by Q1, **2SK19GR** and fed to either of Q2, **TA-7060**, or Q4, **2SK19GR.**

When the RF processor switch is OFF, the source of Q4, **2SK19GR** is grounded and then the signal is amplified by Q4 and Q6, **2SK19GR** of which gain is controlled by the ALC voltage declined from the final amplifier grid circuit to prevent the distortion which may be caused by the over drive.

A potentiometer VR1 is used to preset the signal level equal for the both of processor ON and OFF.

With the RF processor switch ON, the pin 3 of Q2, **TA7060P** is grounded and it works as dipper for the signals that exceed the predetermined level. The clipped signal is fed through the source follower, Q3, **2SK19GR** to a crystal filter XF30A to eliminate the harmonics generated by the clipper.

Then the signal amplitude is controlled by Q5, **2SC372Y.**

Q3 varies its resistance between collector and ground by the voltage applied to the gate from a potentiometer VR3b located on the front panel.

(10) RECTIFIER UNIT (PB-1076B)

The rectifier PB-1076B is located under the main chassis in the power supply compartment, and delivers four different DC voltages. The power amplifier plate voltage (600 Volts DC) is supplied from the bridge connected silicon rectifiers D1–D4 and D9–D12. 300 Volts DC is also obtained from this circuit for the driver plate supply.

160 Volts DC and–100 Volts DC are obtained through D5 and D6. D5 supplies the final tubes screen grid voltage, and D6 is used for the bias supply.

10.5 Volt AC is rectified by D7 and D8 for the transistor supply voltage.

(11) MAIN CHASSIS

The main chassis contains the power supply, transmitter driver, final amplifier and other associated circuits. All sockets for plug-in modules are mounted on the main chassis.

(A) POWER SUPPLY

The power supply is designed to operate from either 100/110/117/200/220/234 volts AC or 12 volts DC (negative ground). Inserting the appropriate power plug into the rear panel receptacle makes the necessary connections to operate the supply in either mode, AC or DC.

When the transceiver is operated from a 12 volt DC power source, transistors Q1 and Q2, **2N4280** function as a low frequency oscillator to provide AC to the power transformer. Starting bias for the oscillator is obtained from divider resistors R3, R4 and R5. All of the tubes heaters and input voltage to the DC converter are supplied through the HEATER switch.

With the HEATER switch in the "OFF" position, voltage is still supplied to the receiver section, which allows continuous reception at reduced power consumption levels.

The high-voltage winding of the power transformer T11 is connected to a bridge-type solid state rectifier to supply approximately +600 volts and +300 volts to the transmitter tubes. Output from the 120 volt tap is rectified to deliver +160 volts to the screen grids and –100 volts for the bias supply. During AC operation, T11 is energized by two primary windings. These windings can be connected in series for 200/220/234 volts and in parallel for 100/110/117 volts operation.

The output from a high current winding of 10.5 volts is rectified and is used to supply the transistorized stages.

(B) PRESELECT CONTROL

The preselect control adjusts three gang-tuned coils T101A, T102 and T103. T101A tunes the receiver front end. T102 provides interstage tuning on receive as well as driver grid tuning on transmit. T103 tunes the driver plate circuit. T104, T105 and T106 are placed in the circuit when the band switch is in 160 thru 40 meter band to obtain aproper impedance match for minimum distortion.

T111 is connected to the heterodyne crystal X1–X11 through the band switch and delivers the signal from the secondary to the mixer stages.

Diode switches are used in several locations for isolation of the circuits.

(C) FINAL AMPLIFIER

The signal from the transmitter second mixer is fed to the grid of transmitter driver V1, **12BY7A** where it is amplified to a level sufficient to drive the final linear amplifier V2 and V3, **6JS6C.** The signal appearing across T103 and T105 is coupled to the grids V2 and V3. Neutralization of the power amplifier is accomplished by feeding back a small amount of the output through TC27 to the bottom of T103/T105 combination. Final output from V2 and V3 is fed to the antenna. The output RF voltage is divided by C28 and C29, and is rectified by D4, **1S1007** to indicate relative output power when the meter switch is in the PO position.

The ALC (automatic level control) voltage is obtained by D2 and D3, **1S1555** and controls the gain of the IF amplifier.

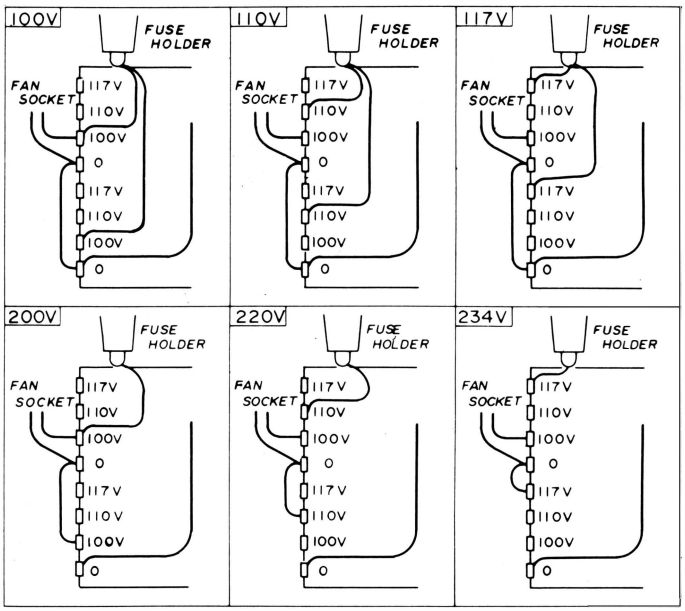

POWER TRANSFORMER CONNECTIONS

(11) METERING

The meter circuit is designed to indicate signal strength in the receive mode. On transmit, the meter may be switch selected to indicate cathode current, relative Power Output, and automatic level control. The meter functions are automatically switched by means of relay contacts for transmit and receive modes.

ALC meter reading is obtained from the source voltage of Q6, **2SK19GR** which varies in accordance with the ALC voltage derived from the final amplifier grid circuit.

For the EE and EX models, the meter reads the variation of the source voltage of Q1, **2SK19GR** in the modulator unit.

In the IC position, the meter is connected to the cathodes of final tubes in parallel with shunt resistor R12, and measures total cathode current of the tubes.

In the PO position, the relative power output is indicated by the rectified DC current at the pi output circuit. The meter sensitivity is adjusted by potentiometer VR6 located on the rear panel.

When the transceiver is in the receive mode, the AGC voltage developed by the signal is fed to the meter amplifiers Q4 and Q5 to provide a meter deflection proportional to input signal strength. The meter is calibrated in the customary "S" units. A meter indication of S-9 represents approximately 50 microvolts at the antenna terminals.

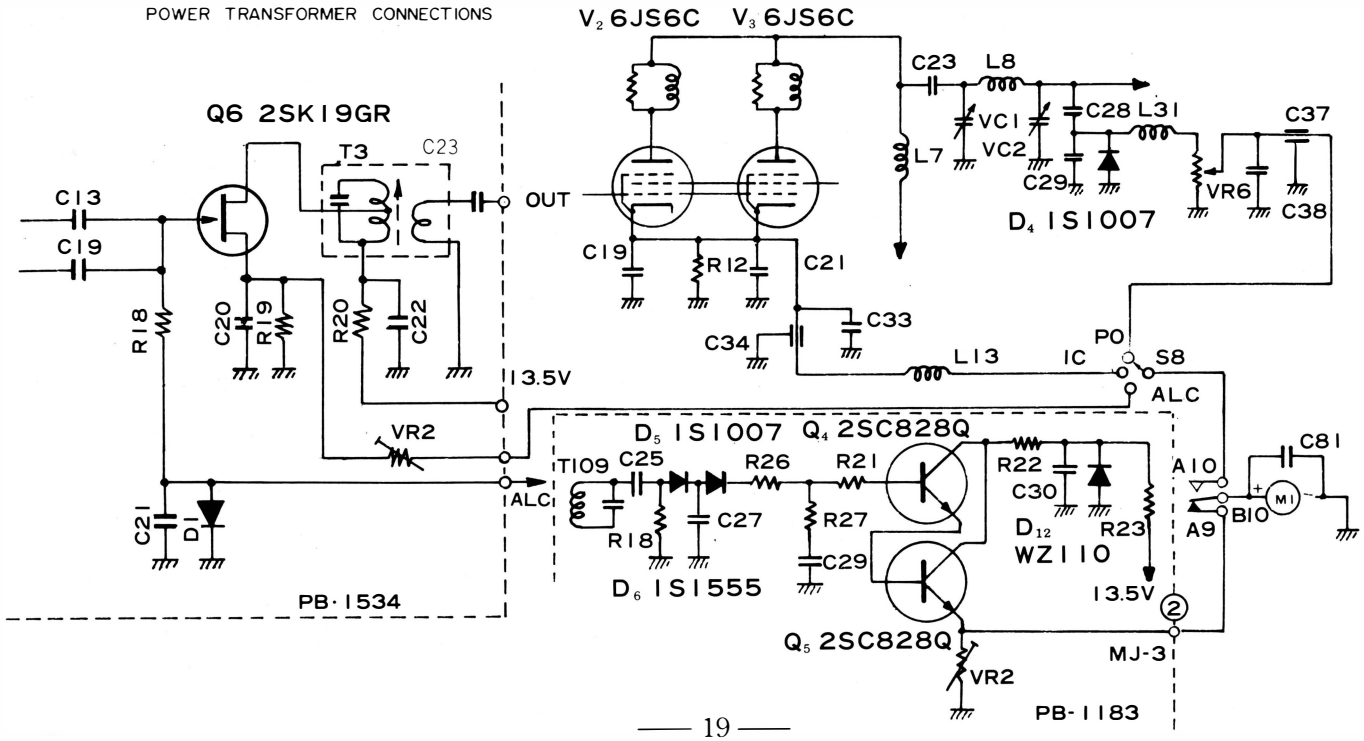

CRYSTAL CALCULATIONS FOR CRYSTAL CONTROLLED TRANSCEIVER OPERATION WITH THE EXTERNAL VFO OR THE TRANSCEIVER INTERNAL FIX OSCILLATOR, **PB1534**

The crystal holders accept standard HC-25/U type crystals. All crystal frequencies must fall between 8,700 KHz and 9,200 KHz. A trimmer capacitor has been connected in parallel with each crystal to permit proper frequency adjustment. Adjustment of this trimmer will change the crystal frequency approximately 1 KHz.

The correct crystal frequency for any desired operating frequency, may be determined by the following formula :

$$Fx = (F1 + Fc) - Fo$$

Fx=(F1+ Fc)−Fo, where **Fx** is the crystal frequency, **Fo** is the desired operating frequency, and the constant **(F1 +Fc)** is taken from the table.

Frequency Table (F1 + Fc) Unit : KHz

BAND	LSB	USB	AM/CW
160	10701.5	10698.5	10699.3
80	12701.5	12698.5	12699.3
40	16201.5	16198.5	16199.3
20	23201.5	23198.5	23199.3
15	30201.5	30198.5	30199.3
10A	37201.5	37198.5	37199.3
10B	37701.5	37698.5	37699.3
10C	38201.5	38198.5	38199.3
10D	38701.5	38698.5	38699.3

For Example :
Find the proper crystal for operation at 3900 KHz LSB on the 80 meter band.

From the table find the constant (Fl + Fc) for LSB operation on this band. The constant is 12701.5, therefore Fx = 12701.5 − 3900
= 8801.5 KHz.

CW FILTER INSTALLATION

1. Remove top cover of transceiver cabinet and locate printed circuit boards PB-1315A and PB-1183B.

2. Remove two screws holding PB-1315A to the U shaped bracket. Remove two screws holding the U-shaped bracket to the shield plate, located between the two boards.

3. Remove PB-1315A from the chassis connector receptical. Gently, rock the circuit board out of the connector.

4. Remove the two screws holding the shield plate and lift out of the cabinet.

5. Grasping the U-shaped brackets still attached to PB-1183B gently, rock the circuit board out of the connector.

6. With PB-1183B removed from the chassis, remove C-10 and C-9 (.01 uF) capacitors from board. Install XF-30C CW filter in position indicated using the nuts and lockwashers provided. Solder the four filter terminals to the board.

7. Re-install PB-1183B into socket, screw shield plate to chassis, and re-install PB-1315A into socket. Replace all attaching screws.

This completes the CW filter installation. The filter provides a 600 Hz bandpass when the mode switch is placed in the CW position. Transicever alignment is not required for this installation.

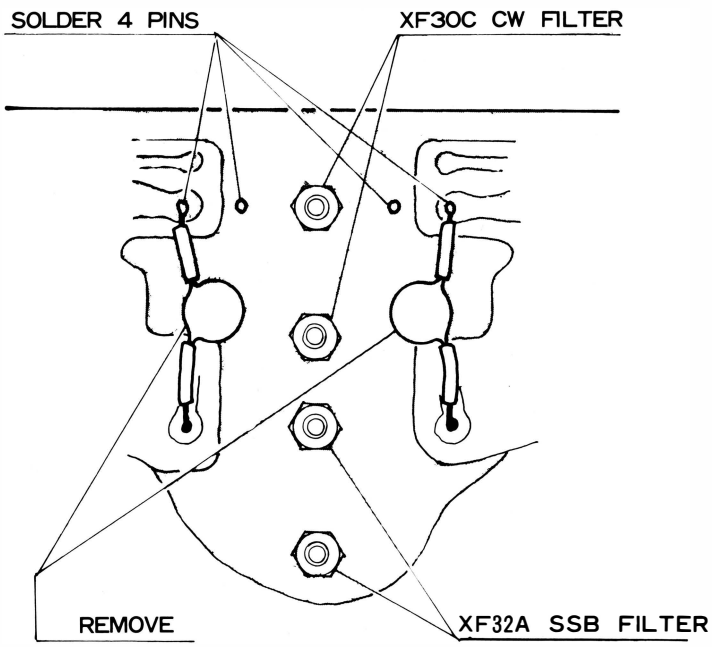

CW Filter Solder Connections

ALIGNMENT

WARNING

DANGEROUS VOLTAGES ARE PRESENT. USE EXTREME CAUTION WHEN WORKING ON THE TRANSCEIVER WITH COVERS REMOVED. DISCHARGE ALL CAPACITORS BY SHORTING TO GROUND WITH AN INSULATED SCREW DRIVER, ETC.

CAUTION

Never operate the transceiver in the transmit mode without a matched antenna or adequate dummy load. The power amplifier tubes and Pi network components can be damaged if the transceiver is operated without the proper load termination.

GENERAL

The transceiver has been carefully aligned and tested at the factory and, with normal usage, should not require other than the usual attention given to electronic equipment. Service or replacement of a major component may require subsequent realignment, but under no circumstance should realignment be attempted unless the operation of the transceiver is fully understood, the malfunction has been analized and definitely traced to misalignment.

Service work should only be performed by experienced personnel, using the proper test equipment.

Capacitors, resistors, inductors, and transformer adjustments should not be varied more than a few degrees in either direction from their original setting. If the adjustments require varying by an appreciable amount, check for the presence of a defect other than alignment.

EQUIPMENT REQUIRED

(1) RF Signal Generator: Hewlett-Packard Model 606A, or equivalent with one volt output at an impedance of 50 ohms and a frequency coverage to 30MHz.

(2) Vacuum Tube Voltmeter (VTVM): Hewlett-Packard Model 410B, or equivalent VTVM with an RF probe good to 40 MHz.

(3) Dummy Load: Waters Model 334A or equivalent 50 ohms non-reactive load rated at 300 watts average power.

(4) AF Signal Generator: Hewlett-Packard Model 200 AB, or equivalent.

(5) A general coverage receiver covering the frequency range from 3 to 30 MHz with a 100 KHz calibrator.

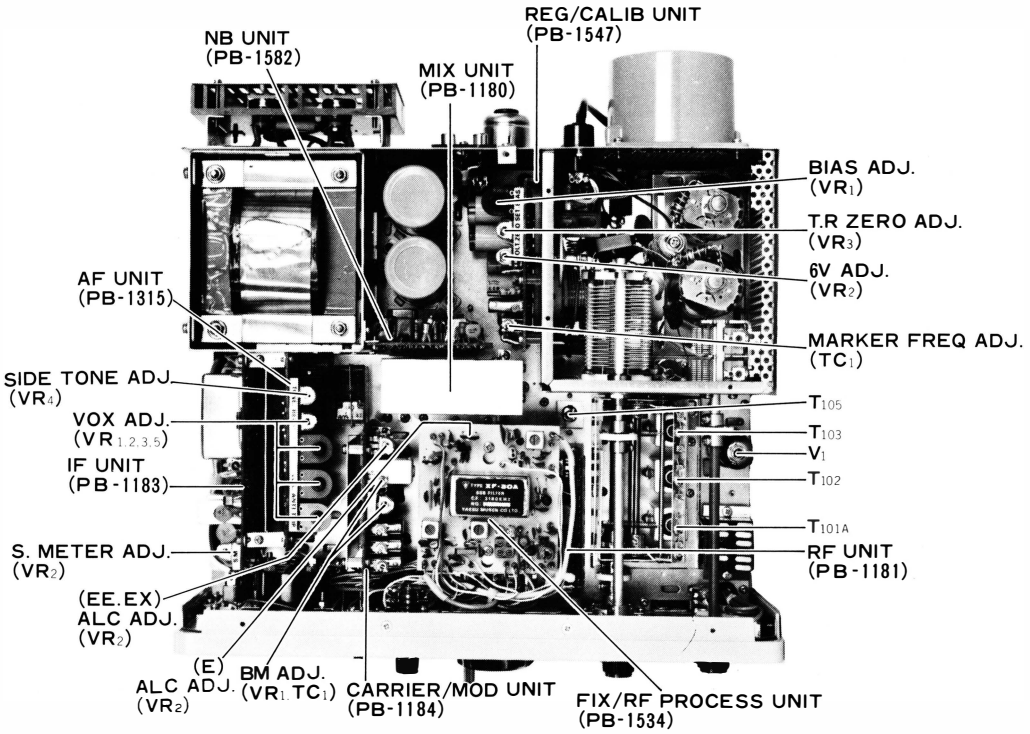

Alignment Points—Top View

1. S-METER SENSITIVITY ADJUSTMENT

Place the transceiver in the receive mode and connect a signal generator to the antenna terminal of the transceiver. Set the signal generator to 14200 KHz with an output of 50 uV.

Tune the transceiver for maximum S-meter reading. The S-meter should read S-9 +25dB. If S-meter adjustment is required, adjust VR2 on PB-1183B to obtain the reading.

When the transceiver is tuned to 14200 KHz the 100 kHz crystal calibrator output will be approximately 50 μV or S-9 +25dB on the S-meter.

2. NOISE BLANKER ADJUSTMENT

Connect a signal generator to the antenna terminal and tune the receiver to the signal.

Peak T120 and TC1 for a maximum S-meter reading.

Connect VTVM between Tp (collector of Q5) and adjust T123 for a minimum VTVM reading.

3. VOX ADJUSTMENT

VOX controls are located on PB1315A These are VR1 VOX Gain, VR2 Delay, VR3 Relay Sensitivity and VR5 Antitrip Gain.

Set the operation switch to the VOX position and turn the AF GAIN and MIC GAIN controls fully counterclockwise. Slowly rotate the RELAY control (VR3) clockwise until the relay activates, then return the control carefully counterclockwise until relay releases. This release point is the proper setting for the RELAY sensitivity control.

Set MIC GAIN control to the center of its travel. Speak into the microphone normally, adjust VOX control VR1 to just activate VOX relay.

Tune in a signal and adjust the AF GAIN control to a comfortable listening level. Set the ANTITRIP control VR5 to the minimum point that will prevent the speaker output from tripping the VOX.

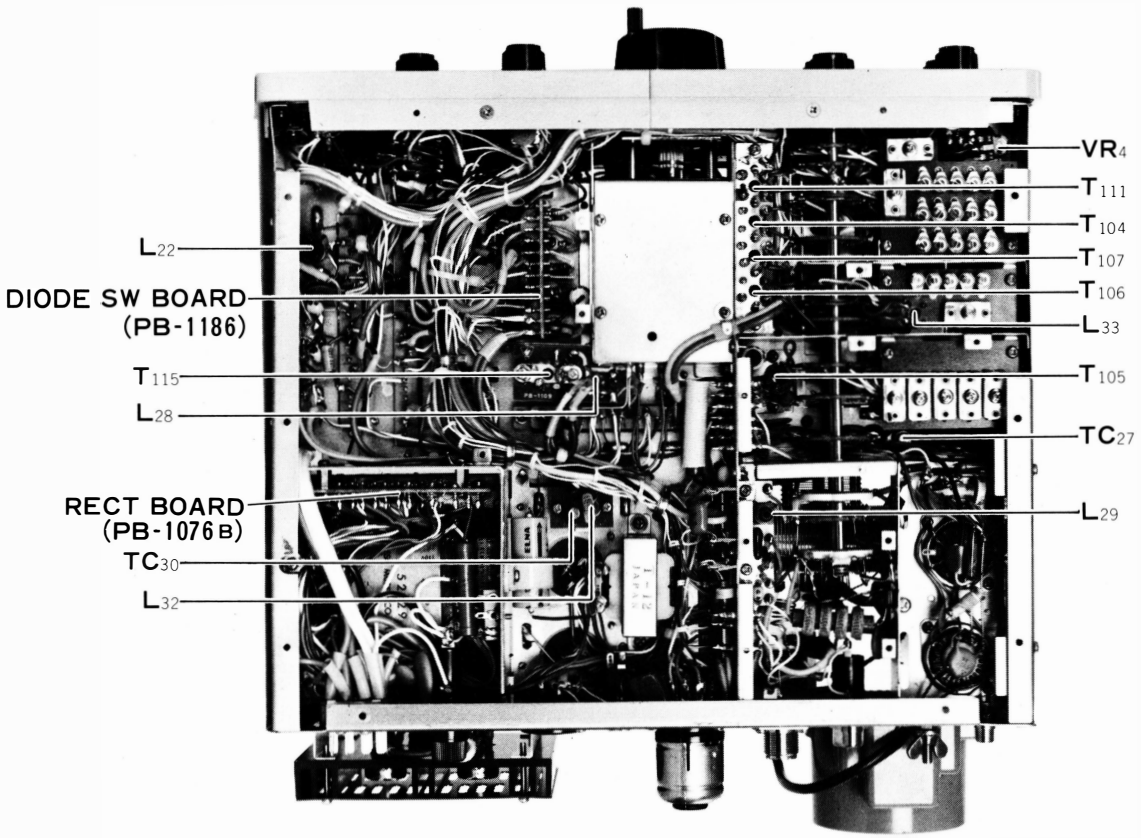

Alignment Points—Bottom View

Adjust the DELAY control VR2 for suitable release time.

4. CW SIDETONE LEVEL ADJUSTMENT

CW sidetone level may be adjusted by rotating TONE-level potentiometer (VR4) located on PB-1315A.

5. CARRIER BALANCE

The transceiver should be allowed to reach operating temperature before making the carrier balance adjustment.

Tune-up the transceiver for SSB operation using an antenna or dummy load. Turn the MIC GAIN control fully counterclockwise to remove all audio from the modulator stage.

With the MODE switch set to either the LSB/USB positions, turn the "FUNCTION SWITCH" to the MOX position and adjust the carrier balance controls (VR1 and TC1) on PB-1184A for minimum PO meter reading.

A more exacting balance may be obtained by tuning a receiver, having an S-meter, to the transmitted frequency. Adjust the balance controls for minimum S-meter reading while switching the MODE switch back and forth between the two sideband positions to obtain good carrier suppression for both sidebands.

6. ALC LEVEL ADJUSTMENT (EE/EX model)

The ALC meter will require adjustment if when the METER switch on the front panel is set to the ALC position, the mode switch to USB, the "FUNCTION SWITCH" to MOX and the microphone gain to zero the ALC meter does not read 5. To adjust the meter, set the controls as follows:

MODE .....USB
MIC GAIN ..... Fully CCW
MOX-PTT-VOX .....MOX

If the meter reads other than .5 on the bottom scale, adjust the ALC control VR2 on PB-1184A for a meter indication of .5. Return the "MOX-PTT-VOX" switch to the PTT position.

For the E model, please refer to the following RF processor adjustment.

7. RF PROCESSOR

Set the controls and switches as follows:

MODE	SSB (either LSB or USB)
HEATER	OFF
METER	ALC
PROCESS	OFF
MIC GAIN	Fully CCW position
BAND	Any Band

Set the operation switch to MOX position and adjust a potentiometer VR2 until the meter indicates exactly full scale without any modulation.

Connect the 1 kHz audio signal generator output of 10 mV to the MIC input. Adjust the MIC GAIN control until the audio input voltage becomes 30 mV at the gate of Q1, 2SK19GR. Peak T1 and T3 for maximum audio output at the output coil of T3. Set the VR1 for 30 mV output at T3.

Set the RF PROCESSOR switch to ON position and peak T2 for a maximum output.

8. VOLTAGE REGULATOR ADJUSTMENT

Connect a VTVM DC probe between pin 13 of MJ 6 (PB-1547) and ground. Adjust VOLT potentiometer VR2 for exactly 6 Volt reading on VTVM.

9. CLARIFIER ADJUSTMENT

The frequencies coincide at CLARIFIER control OFF and 0 position in the receive mode. If not, adjust potentiometer VR3 located near the clarifier control potentiometer under the main chassis.

Transmit and receiver frequencies coincide at CLARIFIER control OFF position. If not, adjust ZERO potentiometer VR3 on PB-1547.

10. BIAS ADJUSTMENT

The final amplifier bias must be checked to insure linearity and normal operating plate dissipation for the final tubes. Adjust the BIAS control VR1 on PB-1547 as follows: Set the transceiver to the receive mode and allow the transceiver to reach operating temperature.

Set MODE switch to USB, METER switch to IC and the "FUNCTION SWITCH" to MOX position for transmit condition. The meter will indicate PA plate current. Idle plate current is 60 mA if the bias

is correct. If the idle plate current is other than 60 mA, adjust the BIAS control for 60 mA.

There is a little difference in the idle current between AC and DC operation. Adjust the idle current to 60 mA for each operation.

11. POWER OUTPUT METER ADJUSTMENT

VR6, located on the transceiver rear panel adjacent to the antenna coax fitting, provides an adjustment for power output indication on the meter.

This potentiometer should be adjusted to indicate 1/2 to 2/3 full scale meter deflection when the transmitter is producing full output power in the tune position.

It should be noted that the meter indicates relative power output and is not the basis for determining actual power output.

VR6 has been preset at the factory to read 1/2 to 2/3 full scale into a 52 ohm dummy load. The operator should not indiscriminately adjust VR6 into an unknown load or an antenna with high VSWR.

12. FINAL AMPLIFIER NEUTRALIZATION

When replacing the final amplifier tubes, it may be necessary to reset the bias to give correct idle current and check neutralization. Using the procedure outline below will guarantee maximum output and long tube life.

CAUTION

HIGH VOLTAGES ARE PRESENT ON UNDERSIDE OF CHASSIS AND INSIDE OF FINAL COMPARTMENT. USE GREAT CARE WHILE MAKING ADJUSTMENTS WITH WIRING EXPOSED.

(1) Connect a dummy load to antenna, and set meter to IC.

(2) Locate TC27 the neutralization variable capacitor shaft on the underside of the chassis near the driver stage band switch wafer, in the final amplifier section.

(3) Check final amplifier idle current in USB or LSB position and adjust as described before.

(4) Tune up the transceiver at 29 MHz, 10B or 10C band with MODE switch at TUNE position, and advance the CARRIER control until meter IC reads 200mA.

(5) Rotate PLATE tuning control and observe dip as indicated on the meter. If the dip is not prominent, reduce the loading control slightly for better indication. As the PLATE control is rotated the meter should rise equally and smoothly on either side of maximum dip indication.

(6) Determine which side of the dip rises abruptly. Set PLATE control slightly to this side of dip keeping the meter reading below 100 mA.

(7) Using nonmetallic tuning wand, rotate neutralization capacitor shaft very slightly in the direction which reduces the current shown on the meter. Repeat steps 6 and 7 until the meter indicates a smooth and equal rise on either side of the maximum dip point.

The final compartment cover must be in place to supply the RF shielding required during the neutralization procedure.

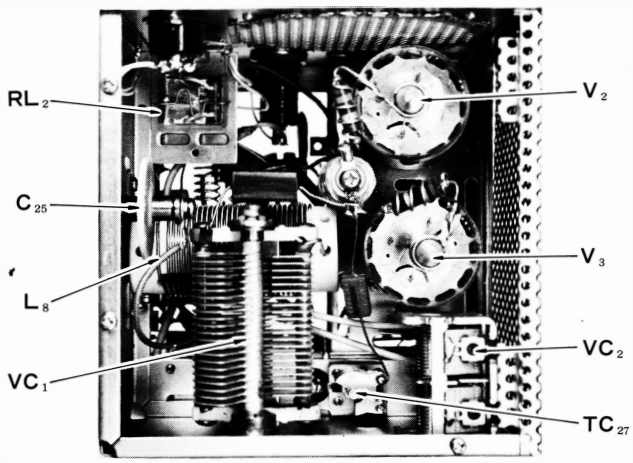

FINAL AMPLIFIER COMPARTMENT

13. ALIGNMENT OF TRANSMITTER MIXER/DRIVER AND RECEIVER FRONT END STAGES

The final amplifier bias adjustment must be set to 60 mA before extensive operation of the transmitter is attempted. It is assumed that the signal generating stages of the transceiver are functioning properly. Use the internally generated signal of the transceiver to align the transmitter mixer and driver stages and the RF signal generator to align the receiver front end stage.

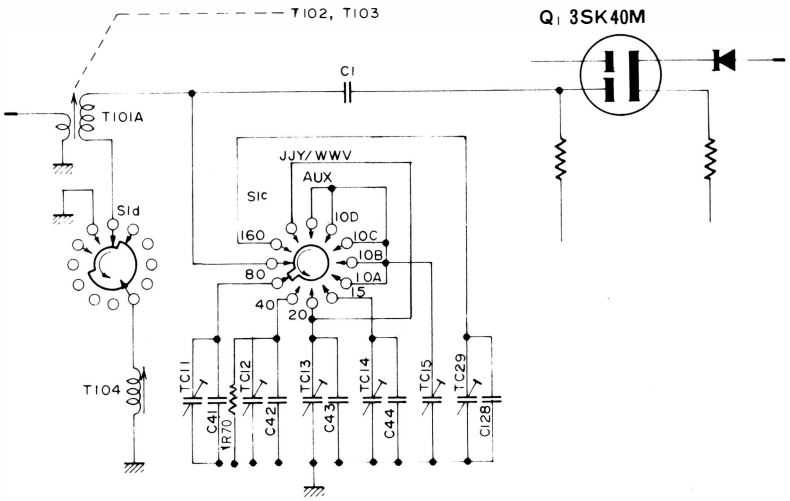

RF INPUT CIRCUIT

BAND	COIL	CAPACITOR		TRIMMER
160	T101A +T104	C128	820 PF	TC29
80		C41	240	TC11
40		C42	30P	TC12
20	T101A	C43	50 PF	TC13
15		C44	20 PF	TC14
10				TC15

(1) Connect the 50-ohm dummy load to the antenna Jack. Tune up the transceiver at 30,000 KHz (BAND 10D, VFO at 30,000 KHz) as follows; Set the BAND switch to 10D, the VFO to 30,000 KHz, PRESELECTOR control to the upper end of 10 meter segment and the OPERATION switch at MOX. Advance the CARRIER control and tune the final amplifier. Maintain the resonant plate current (IC) at 100 mA with the CARRIER control. Set trimmer TC5 to the mid-capactance position and adjust the slugs of T102 and T103 for maximum output into the dummy load. Reduce the transmitter output to zero with the CARRIER control.

(2) Set the OPERATION switch to the receive mode, RF and AF GAIN control to maximum, CLARIFIER control to "OFF", and NOISE BLANKER to "OFF". Do not change the VFO setting and PRESELECTOR control setting set up in step 1. Tune the RF signal generator to 30,000 KHz and adjust it for approximately 1,000 Hz beat note. Use just enough signal generator output (approximately 1 microvolt for an aligned unit) to keep from developing AGC voltage (no S-meter indication). Set trimmer TC15 to the mid capacitance position. Adjust a slug of T-101 for maximum audio output without developing AGC voltage.

(3) Set the BAND switch at 10A, the VFO at 28,000 KHz and the "MOX-PTT-VOX" switch at MOX. Advance the CARRIER control and tune the final amplifier. Maintain the meter reading at 100 mA with the CARRIER control as described in step 1.

Set the PRESELECTOR control to the lower end of 10 meter segment and adjust trimmer TC5 for maximum output at the dummy load. Reduce the transmitter output to zero with the CARRIER control.

(4) Set the OPERATION switch to the receive mode and without changing the VFO or PRESELECTOR control settings, tune the RF signal generator to 28,000 KHz and obtain 1,000 Hz beat note.

BAND	GRID CIRCUIT			PLATE CIRCUIT		
	COIL	CAPACITOR	TRIMMER	COIL	CAPACITOR	TRIMMER
160		C129 820P	TC28		C130 820P	TC10
80	T102+T106	C4 200P	TC1	T103+T105	C9 200P	TC6
40		C5 30P	TC2		C106 30PF	TC7
20		C6 50PF	TC3		C10 50PF	TC8
15	T102		TC4	T103	C107 10PF	TC9
10			TC5			

12BY7A TUNING CHART

Control the signal generator output and adjust trimmer TC15 for maximum audio output as described in step 2.

(5) Repeat step 1, 2, 3 and 4 to peak out the coil adjustments for the 10 meter band.

(6) Set the BAND switch to 15, the VFO to 21,000 KHz and the PRESELECTOR to the lower edge of the 15 meter segment. Tune up the transceiver to 21,000 KHz as described above. Adjust trimmers TC4 and TC9 for maximum transmitter output into the dummy load.

(7) Set the OPERATION switch to the receive mode, and without changing the VFO or PRESELECTOR settings. Tune the RF signal generator to 21,000 KHz and obtain the 1,000 Hz beat note. Adjust trimmer TC14 for maximum audio output as described in step 2.

(8) Repeat the procedures given in step 6 and 7 on the 20 meter band. The trimmer TC3 and TC8 are used for maximum transmitter output and TC13 for maximum audio output in receive.

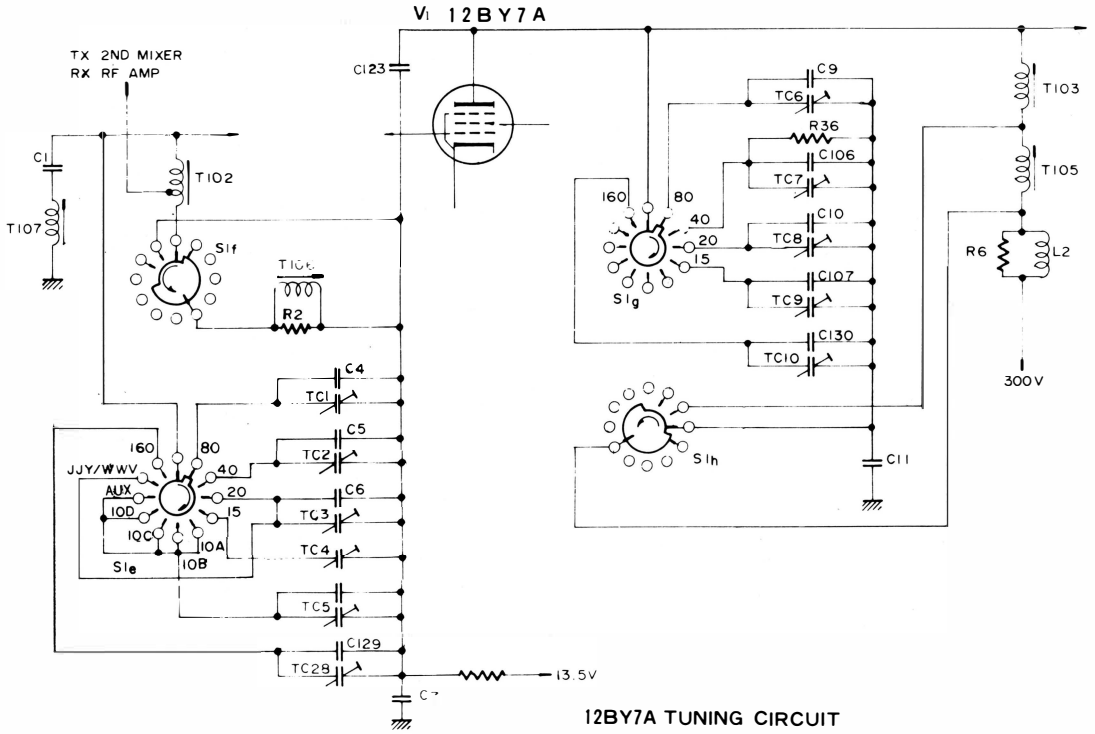

12BY7A TUNING CIRCUIT

(9) Set the BAND switch at 80, VFO at 4,000 KHz, and the PRESELECTOR at 7 of the inner scale Set TC1 and TC6 at the mid-capacitance point. Tune the transceiver to 4,000 KHz and adjust T105 and T106 for maximum transmitter power output into the load.

(10) Set the OPERATION switch to the receive mode, and without changing the VFO or PRESELECTOR settings, tune the RF signal generator to 4,000 KHz and obtain a 1,000 Hz beat note. Set TC11 to the mid-capacitance point. Adjust T104 for maximum audio output as described in step 2.

(11) Set the PRESELECTOR at the lower edge of the 80 meter segment, VFO at 3,500 KHz, and adjust TC1 and TC6 for maximum transmitter power output into the dummy load.

(12) Set the OPERATION switch to the receive mode, and without changing the VFO or PRESELECTOR settings, tune the RF signal generator to 3,500 KHz and obtain a 1,000 Hz beat note. Adjust TC11 for maximum audio output as described in step 2.

(13) Repeat step 9, 10, 11, and 12 to peak out the coil adjustments for 80 meter bands.

(14) Set the BAND switch to 40, VFO at 7,000 KHz and the PRESELECTOR to the lower edge of the 40 meter segment. Adjust TC2 and TC7 for maximum transmitter power output into the dummy load.

(15) Set the VFO at 7,150 KHz and PRESELECTOR for maximum power output. Adjust L33 for maximum power output into the dummy load.

(16) Set the OPERATION switch to the receive mode, and set the VFO or PRESELECTOR settings to the same position as step 14, tune the RF signal generator to 7,000 KHz and obtain a 1,000 Hz beat note. Adjust TC12 for maximum audio output.

(17) Set the BAND switch to 160, VFO at 1,900 KHz and the PRESELECTOR at 2 of the inner scale. Adjust TC28 and TC10 for maximum power output into the dummy load.

(18) Turn the OPERATION switch to the receive mode, and leave the VFO and PRESELECTOR settings unchanged. Apply the RF signal generator output at 1,900 KHz to antenna terminal. Adjust TC29 for maximum S-meter reading.

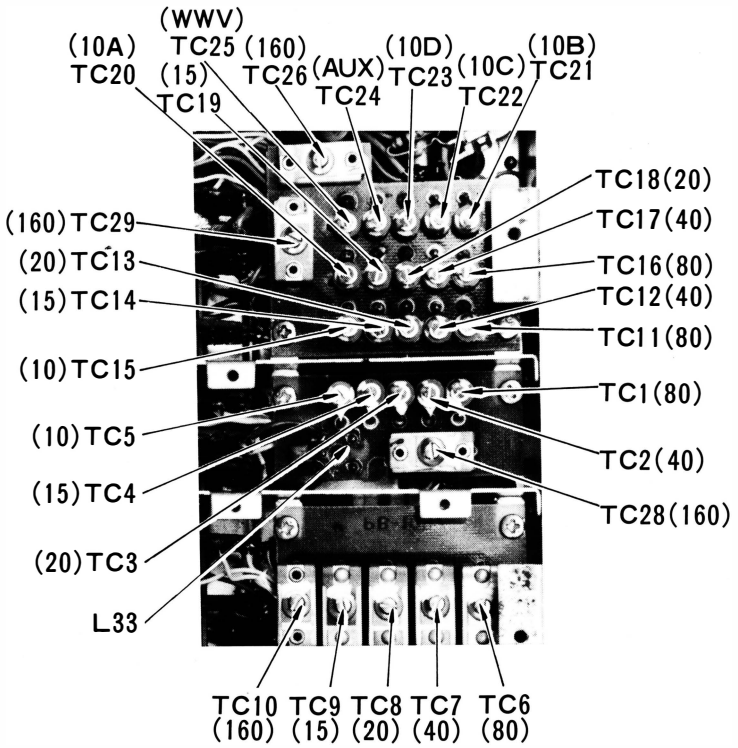

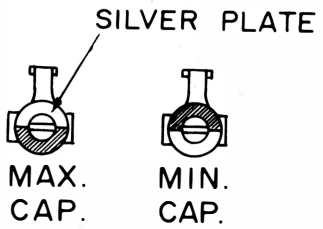

14. HETERODYNE CRYSTAL OSCILLATOR ALIGNMENT

The heterodyne crystal oscillation injection may be checked in the following manner. Connect the VTVM RF probe to the local oscillator test point. Injection is normal if the injection voltage measures 0.3 Volt RMS on all bands.

If not, alignment is required. Set the BAND switch at 10D, TC23 at 1/3 capacitance position, and adjust T111 for 0.3 Volt RMS reading on VTVM. Then adjust TC23, TC22, TC21,....., TC16 and TC26 for each of the band to read 0.3 Volt RMS on VTVM.

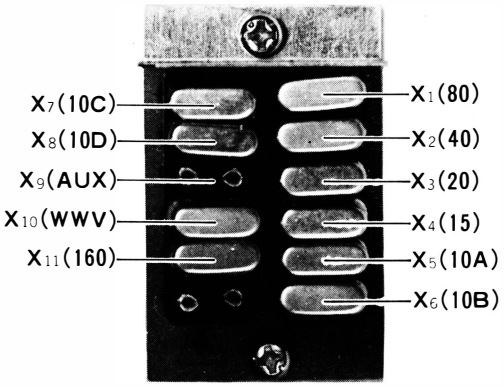

BAND	No.	TUNING CAPACITOR		CRYSTAL FREQUENCY
160	X11	C127 250PF	TC26	7.52MHz
80	X 1	C45 300PF	TC16	9.52MHz
40	X 2	C46 150PF	TC17	13.02MHz
20	X 3	C47 50PF	TC18	20.02MHz
15	X 4		TC19	27.02MHz
10A	X 5		TC20	34.02MHz
10B	X 6		TC21	34.52MHz
10C	X 7		TC22	35.02MHz
10D	X 8		TC23	35.52MHz
AUX	X 9		TC24	
WWV	X10	C48 100PF	TC25	16.02MHz

LOCAL OSCILLATOR TUNING CHART

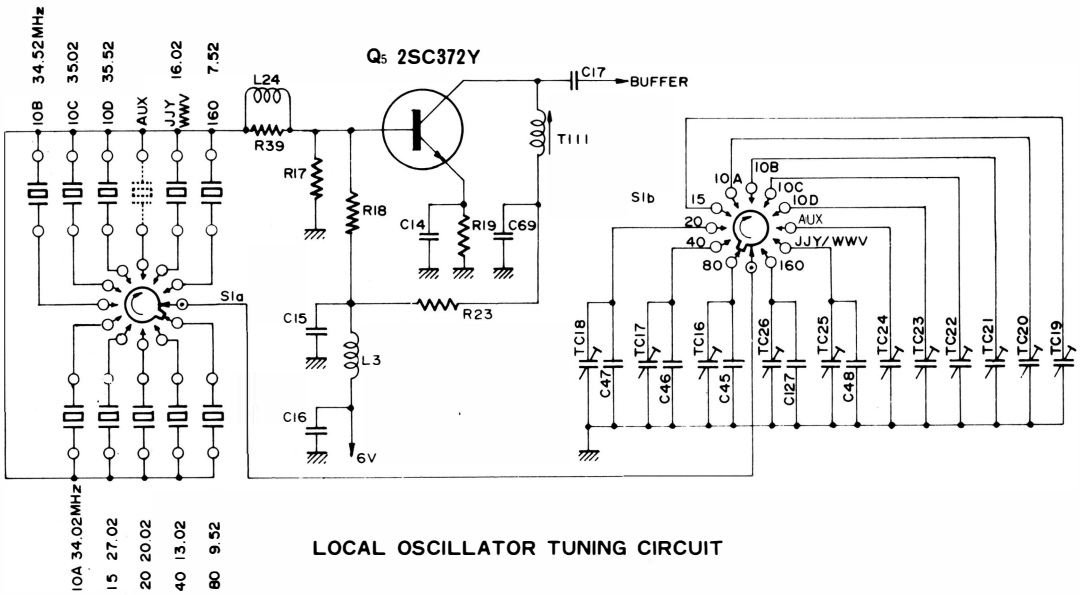

LOCAL OSCILLATOR TUNING CIRCUIT

15. TRAP COIL ALIGNMENT

(1) T107 is used to eliminate the direct-feed-through interference at the IF frequency, and tuned to 5,720 KHz. Set the transceiver at 7,300 KHz LSB in receive mode and peak the PRESELECTOR for maximum noise output. Set the RF signal generator to 5,720 KHz and increase the signal generator output until an audio beat note is heard. Adjust T107 for minimum audio output.

(2) L29 on the printed circuit board located near the antenna change-over relay RL2 is also used to eliminate the direct- feed-through interference. Set the transceiver at 7,080 KHz in the receive mode. Tune the RF signal generator to 5,940 KHz. Adjust L29 for minimum S-meter reading.

3) L22 eliminates the interference by 9th harmonic of the carrier oscillator. Tune the transceiver to 28,600 KHz USB in the receive mode, and increase RF and AF gain control until an audio beat note is heard. Adjust L22 for minimum audio output.

CAUTION

Continuous full output for more than 10 seconds may result in destruction of final tube.

(4) T113 in the high frequency IF unit is used to eliminated spurious radiation on the 20 meter band. For alignment, tune transceiver to maximum output at 14,350 KHz in the tune postion. Measure the spurious radiation, by using the S-meter of another receiver tuned to 14,520 KHz where a spurious radiation can be heard. Adjust T113 for minimum S-meter reading wihout decreasing the power output of the transceiver.

(5) T115 is located on the printed circuit board near the VFO unit and is used to suppress carrier oscillator feed-through . Tune the transceiver to any frequency and load it to full output. Reduce the microphone gain to zero and place the mode switch in the USB position. Adjust T115 for minimum S-meter reading on the receiver.

(6) L28 is used to eliminate spurious radiation on the 15 meter band. Tune the transceiver to maximum output at 21,200 KHz in the tune position. Locate the spurious radiation at 21,220 KHz by another receiver. Adjust L28 for minimum S-meter reading on the receiver.

(7) TC30 connected in series with L32 on the printed circuit board located on the main chassis near the relay RL1 is used to eliminate spurious radiation on 10 meter band. For alignment, tune transceiver to maximum output at 28,500 KHz in the tune position. Measure the spurious radiation by using the S-meter of another receiver tuned to 28,160 KHz where the spurious signal can be heard. Adjust TC30 for minimum S-meter reading without decreasing the power output of the transceiver.

VOLTAGE CHART

	D.C. VOLTAGE														R.F. VOLTAGE													
MJ	1		2		3		4		5		6		7		1		2		3		4		5		6		7	
PIN	R	T	R	T	R	T	R	T	R	T	R	T	R	T	R	T	R	T	R	T	R	T	R	T	R	T	R	T
1	E	E	E	E	E	E	E	E	E	E	E	E	0	0	E	E	E	E	E	E	E	E	E	E	E	E	3180KHz 55dB	—
2	E	E	E	E	0	0	0	0	0	0	-70	-55	E	E	E	E	E	E	—	—	—	—	—	—	—	—	E	E
3	5.5	5.5	0	0	13.0	12.5	0	0	0.7	0.7	-18	0	E	E	* 3	* 3	3180KHz 47dB	0	—	—	—	—	—	—	—	—	E	E
4	0.5	0.5	E	E	0	0	0	0	8.5	8.5	-20	-3.5	0	0	* 2	* 2	E	E	—	—	—	—	—	—	—	—	3180KHz 47dB	—
5	5.5	5.5	13.0	12.5	0	0	0	0	6.0	6.0	-150	-140	0	11.5	—	—	—	0.02	0.8	0	—	—	—	—	—	—	—	—
6	6.0	6.0	E	E	0	0	E	E	0	0	170	170	0	0	—	—	E	E	—	—	E	E	0.8	0.8	—	—	—	—
7	E	E	13.0	12.5	E	E	0	0	E	E	—	—	13.0	12.5	E	E	—	—	E	E	—	—	E	E	—	—	—	—
8	0	0	E	E	0	11.5	0	0	0	0	0.6	2.7	1.0	1.0	14MHz 9dB	—	E	E	—	—	—	—	—	—	—	—	—	—
9	8.0	13.0	12.5	0	9.0	9.0	9.0	9.0	0	0	12.5	0	E	E	—	—	—	—	—	—	—	—	—	—	—	—	E	E
10	0	11.5	E	E	0	0	−18	0	13.0	12.5	0	11.5	E	E	—	—	E	E	3180KHz 45dB	0.02	—	—	—	—	—	—	E	E
11	13.0	12.5	0	0	13.0	12.5	E	E	E	E	3.5	3.5	—	—	14MHz 33dB	1.1	0.12	0.12	—	—	E	E	E	E	—	—	—	—
12	12.5	0	E	E	0.7	0.7	0	0	6.6	0.3	13.5	13.0	—	—	—	—	E	E	—	—	—	—	—	0.17	—	—	—	—
13	12.0	0	0	11.5	8.0	13.0	0	0	12.5	0	6.0	6.0	—	—	—	0.15	—	—	—	—	—	—	—	—	—	—	—	—
14	13.0	12.5	13.0	12.5	E	E	6.0	6.0	12.5	0	13.0	12.5	—	—	—	—	—	—	E	E	—	—	—	—	—	—	—	—
15	—	—	13.0	12.5	0	0	13.0	12.5	—	—	0	0	—	—	—	—	5720KHz 41dB	0.5	3180KHz 55dB	0.12	—	—	—	—	—	—	—	—
16	0	11.5	13.0	0	—	—	13.0	12.5	—	—	0	0	—	—	—	—	—	0.15	—	—	—	—	—	—	—	—	—	—
17	13.0	12.5	E	E	0	0	0	0	—	—	0	0	—	—	5720KHz 41dB	—	E	E	3180KHz 40dB	0.06	—	—	—	—	—	—	—	—
18	E	E	E	E	—	—	—	—	—	—	E	E	—	—	E	E	E	E	—	—	—	—	—	—	E	E	—	—
19	—	—	—	—	13.0	12.5	0	0	—	—	—	—	—	—	—	—	—	—	—	—	—	—	—	—	—	—	—	—
20	—	—	—	—	—	—	E	E	—	—	—	—	—	—	—	—	—	—	—	—	E	E	—	—	—	—	—	—
21	—	—	—	—	—	—	E	E	—	—	—	—	—	—	—	—	—	—	—	—	E	E	—	—	—	—	—	—
22	—	—	—	—	E	E	0	0	—	—	—	—	—	—	—	—	—	—	E	E	—	—	—	—	—	—	—	—

VALUES ARE IN VOLTS D.C.
R: RECEIVE T: TRANSMIT

MODE: USB, BAND 20M R: RECEIVE T: TRANSMIT
VALUES WITHOUT ANY UNIT ARE IN VOLTS R.M.S.
VALUES WITH DB ARE SIGNAL GENERATOR OUTPUT LEVELS TO PRODUCE S 9
VALUES GIVEN UNDER THE COLUMN T ARE SIGNAL LEVELS TO PRODUCE 100W OUTPUT POWER MODULATED BY 1KHz MIC INPUT

RESISTANCE CHART

PINNO. \ MJ NO.	1	2	3	4	5	6	7
1	E	E	E	E	E	E	∞
2	E	E	15 0	30K	0	10K	E
3	300	0	10	0	∞	4K	E
4	3K	E	∞	※	10 K	10K	0
5	300	3.5K	5	∞	200	30K	0
6	200	E	1K	E	5	50K	0
7	E	10	E	0	E	—	10
8	0	E	100	1K	5K ※	2K	10K
9	2.5K	12 0	10K	∞	1K	120	E
10	0※	E	∞	50K	10	1K ※	E
11	100	∞	10	E	E	500 ※	—
12	120	E	1K	100K	3K	10	—
13	120	0	3K	∞	120	∞	—
14	10	100	E	200	∞	10	—
15	—	10 0	∞	10	—	50K	—
16	0	120	—	10	—	0	—
17	100	E	∞	5K ※	—	∞	—
18	E	E	—	—	—	E	—
19	—	—	10	※	—	—	—
20	—	—	—	E	—	—	—
21	—	—	—	E	—	—	—
22	—	—	E	※	—	—	—

VALUES ARE IN OHMS.

Order Instruction: Parts number is independent for each unit, except T-transformers and T-inductors, therefore it is requested to specify parts number together with unit classification as following example.

No. 1 RF Unit R1 100K ohm ¼w ※ VALUE IS NOMINAL

RF UNIT

PRINTED CIRCUIT BOARD PB-1181(A~Z)

Q	**FET & TRANSISTOR**		
4	TR.	2SC372Y	
5	TR.	2SC373	
3	TR.	2SC784R	
2	FET	2SK19GR	
1	FET	3SK40M	
D	**DIODE**		
1, 2	Si.	1S1555	
R	**RESISTOR**		
22	CARBON FILM	¼W	56Ω
23		¼W	100Ω
16, 24		¼W	220Ω
6		¼W	330Ω
10, 19		¼W	470Ω
11		¼W	560Ω
9, 13		¼W	1KΩ
7		¼W	1.8KΩ
8		¼W	2.2KΩ
17, 20		¼W	3.3KΩ
21		¼W	8.2KΩ
14, 18		¼W	15KΩ
2		¼W	22KΩ
4		¼W	82KΩ
1, 3, 5, 12		¼W	100KΩ
VR	**VARIABLE RESISTOR**		
1	TR-11R		5KΩB
C	**CAPACITOR**		
17	DIPPED MICA	50WV	6PF
5		50WV	50PF
1, 11		50WV	100PF
3	CERAMIC DISC	50WV	0.001μF
2, 4, 7~10, 12~16,		50WV	0.01μF
6, 18		50WV	0.047μF
19	ELECTROLYTIC	16WV	47μF
L	**INDUCTOR**		
1, 2	RF CHOKE		1mH
3	RF CHOKE		250μH

MIXER UNIT

PRINTED CIRCUIT BOARD PB-1082(A~Z)
PB-1180(A~Z)

Q	**FET & TRANSISTOR**		
1	TR.	2SC372Y	
2	FET	3SK40M	
D	**DIODE**		
1	Si.	1S1555	
R	**RESISTOR**		
12	CARBON FILM	¼W	10Ω
5, 7		¼W	100Ω
13		¼W	470Ω
3, 16, 17		¼W	1KΩ
2		¼W	4.7KΩ
14, 15		¼W	5.6KΩ
10		¼W	10KΩ
4, 6		¼W	15KΩ
11		¼W	22KΩ
1		¼W	27KΩ
8		¼W	100KΩ
9		¼W	220KΩ
C	**CAPACITOR**		
6, 19	DIPPED MICA	50WV	20PF
1		50WV	40PF
8		50WV	150PF
2		50WV	470PF
7	CERAMIC DISC	50WV	0.001μF
17		50WV	0.047μF
14~16	CERAMIC FEED THRU		
		500WV	0.001μF
18	ELECTROLYTIC	16WV	1μF
TC	**TRIMMER CAPACITOR**		
1~3		ECV1ZW50X32 50PF	
L	**INDUCTOR**		
1		BPF-A	
2		BPF-B	
3		BPF-C	
34		RF CHOKE 1.95μH	
4, 8		RF CHOKE 250μH	
T	**TRANSFORMER & INDUCTOR**		
112A	IF TRANSFORMER		
113	TRAP COIL		
X	**CRYSTAL**		
1	HC-18/U		6360KHz

IF UNIT

PRINTED CIRCUIT BOARD PB-1183(A~Z)

Q	**FET, IC & TRANSISTOR**		
2	TR.	2SC784R	
4, 5	TR.	2SC828Q	
3	IC	TA7045M	
1	FET	2SK19GR	
D	**DIODE**		
1~5, 7~11	Ge.	1S1007	
6	Si.	1S1555	
12	Zener	WZ-110	
R	**RESISTOR**		
2, 13, 16	CARBON FILM	¼W	100Ω
23		¼W	220Ω
28		¼W	330Ω
20		¼W	470Ω
12, 15, 19		¼W	1KΩ
3, 14		¼W	2.2KΩ
22		¼W	2.7KΩ
8, 9		¼W	3.3KΩ
11		¼W	3.9KΩ
4, 5		¼W	5.6KΩ
17, 24, 25, 27		¼W	10KΩ
10		¼W	27KΩ
1, 18, 21, 26		¼W	100KΩ
6, 7	CARBON COMPOSITION	½W	100Ω
VR	**VARIABLE RESISTOR**		
1	TR12R		500ΩB
2	TR11R		500ΩB
C	**CAPACITOR**		
1, 24, 25	DIPPED MICA	50WV	100PF
15, 22		50WV	150PF
11, 17		50WV	470PF
26~28	CERAMIC DISC	50WV	0.001μF
2~6, 9, 10, 12, 13, 18, 20, 21, 23, 31~34		50WV	0.01μF
7, 8, 14, 16, 19, 35		50WV	0.047μF
29	PLASTIC FILM	50WV	0.47μF
30	ELECTROLYTIC	16WV	10μF
L	**INDUCTOR**		
1~4	RF CHOKE		250μH
T	**TRANSFORMER & INDUCTOR**		
108	IF TRANSFORMER		
109	IF TRANSFORMER(DETECTOR)		
XF	**CRYSTAL FILTER**		

1	XF-32A SSB	
2	XF-30C CW(OPTION)	

AF UNIT

PRINTED CIRCUIT BOARD PB1315(A~Z)

Q	**FET, IC & TRANSISTOR**	
2, 3	TR.	2SC372Y
6, 7	TR.	2SC373
9	TR.	2SC1000GR
1	FET.	2SK19GR
5	FET.	2SK19Y
8	IC	AN214
4	IC	TA-7042M
D	**DIODE**	
1, 2, 3, 4		1S1555
5		WZ-090

R	**RESISTOR**		
13, 14	CARBON FILM	¼W	100Ω
53		¼W	120Ω
41		¼W	220Ω
12		¼W	330Ω
16, 17, 33		¼W	470Ω
45		¼W	560Ω
27		¼W	680Ω
5, 8, 15, 45, 49		¼W	1KΩ
21		¼W	1.5KΩ
20, 28, 34		¼W	2.2KΩ
6		¼W	3.3KΩ
1, 3, 14, 29~31, 39, 40		¼W	4.7KΩ
4, 48		¼W	5.6KΩ
9, 10, 35		¼W	10KΩ
51,		¼W	12KΩ
11, 18		¼W	15KΩ
7, 52		¼W	22KΩ
43, 47		¼W	27KΩ
32, 42		¼W	33KΩ
50		¼W	39KΩ
2, 36, 37, 38, 46,		¼W	47KΩ
22		¼W	470KΩ
23, 24		½W	3.3MΩ
25,		½W	5.6MΩ
26	THERMISTOR		SDT250
VR	**VARIABLE RESISTOR**		
3, 4		TR-11R	10KΩB
1, 5		V160KRZ-1	10KΩB
2		V160KRZ-1	2MΩB
C	**CAPACITOR**		
46	DIPPED MICA	50WV	100PF
15, 27, 51, 52	MYLAR	50WV	0.001μF
47		50WV	0.0047μF
1, 9, 12, 17, 22, 33, 34		50WV	0.01μF
24, 28, 29, 30,		50WV	0.022μF
3, 25, 26, 39, 48, 50		50WV	0.047μF
23, 32, 37, 43, 45		50WV	0.1μF
5, 6, 7, 10, 14, 21	ELECTROLYTIC	16WV	1μF
11		16WV	2.2μF
2, 16, 19, 20, 31, 36		16WV	10μF
8, 35		16WV	22μF
40		16WV	33μF
4, 18, 38, 42, 49		16WV	100μF
13, 41, 44		16WV	220μF

MOD & OSC UNIT

PRINTED CIRCUIT BOARD PB-1184(A~Z)

Q	**FET & TRANSISTOR**	
2, 3, 5, 6	TR.	2SC372Y
4	TR.	2SC828P
1	FET.	2SK19Y
D	**DIODE**	
1~4	Ge.	1S1007

R	**RESISTOR**		
18	CARBON FILM	¼W	100Ω
1, 3		¼W	150Ω
19		¼W	180Ω
2, 21, 30		¼W	470Ω
9~11, 14, 24, 28		¼W	1KΩ
20		¼W	1.5KΩ
6, 8		¼W	2.2KΩ
12, 15, 16, 22, 25, 26, 29		¼W	4.7KΩ
32		¼W	10KΩ
33		¼W	15KΩ
13, 17, 23, 27		¼W	22KΩ
7		¼W	33KΩ
4		¼W	100KΩ
VR	**VARIABLE RESISTOR**		
1		TR11R	500ΩB
2		TR11R	5KΩB
C	**CAPACITOR**		
20, 28, 30	DIPPED MICA	50WV	30PF
19, 27, 32		50WV	40PF
38		50WV	50PF
37		50WV	82PF
5, 10,		50WV	100PF
4		50WV	150PF
21		50WV	300PF
23		50WV	820PF
36		50WV	1000PF
31	CERAMIC DISC	50WV	0.001μF
2, 8, 9, 13, 17, 18, 24, 26, 29, 33		50WV	0.01μF
6, 11, 22, 25, 34		50WV	0.047μF
12	PLASTIC FILM	50WV	0.22μF
15	ELECTROLYTIC	16WV	100μF
TC	**TRIMMER CAPACITOR**		
2~4	CERAMIC	ECV1ZW20X40	20PF
1, 5, 6		ECV1ZW50X40	50PF
L	**INDUCTOR**		
5		RF CHOKE	10μH
2~4, 6, 7		RF CHOKH	22μH
8, 9		RF CHOKE	250μH
T	**TRANSFORMER**		
110		IF TRANSFORMER	
X	**CRYSTAL**		
1		HC-6/U	3178.5kHz(USB)
2		HC-6/U	3181.5kHz(LSB)
3		HC-6/U	3179.3kHz(CW/AM)

REG & CALIB UNIT

PRINTED CIRCUIT BOARD PB-1547(A~Z)

Q	**IC & TRANSISTOR**		
1	IC	μPC 141C	
4	IC	34024PC	
2	TR.	2SA634	
3	TR.	2SC372Y	
5	TR.	2SC784R	
D	**DIODE**		
1~4	Si	1S1555	
X	**CRYSTAL**		
1		HC-6/W	3200kHz
R	**RESISTOR**		
14	CARBON FILM	¼W	150Ω
21		¼W	220Ω
5		¼W	270Ω
13, 15		¼W	470Ω
19		¼W	1kΩ
10		¼W	1.2kΩ
3		¼W	1.5kΩ
20		¼W	2.2kΩ
11		¼W	3.3kΩ
1		¼W	4.7kΩ
23		¼W	6.8kΩ
2, 4, 6, 17		¼W	10kΩ
9		¼W	15kΩ
18, 22		¼W	22kΩ
16.24, 25		¼W	33kΩ

7		¼W	47kΩ
26		¼W	560kΩ
12	CARBON COMPOSITION	½W	2.2Ω
8	METALIC FILM	2W	6.8kΩ
VR	**POTENTIOMETER**		
3	EVL-SOA·B52		500B
2	EVL-SOA·B13		1kB
1	V-106 KRZ-1		10kB
C	**CAPACITOR**		
13	DIPPED MICA	50WV	27PF
16		50WV	270PF
15		50WV	510PF
29, 30	CERAMIC DISC	50WV	1PF(SL)
22, 23, 28		50WV	5PF(SL)
21, 25		50WV	27PF(SL)
27		50WV	39PF(SL)
6		50WV	56PF(SL)
18, 20		50WV	150PF(SL)
14, 19, 24		50WV	0.01μF
3	MYLAR	250WV	0.05μF
5, 17, 26	ELECTROLYTIC	16WV	10μF
4		16WV	47μF
11, 12		16WV	1000μF
9, 10		25WV	1000μF
1		160WV	22μF
2, 7, 8		250WV	22μF
TC	**TRIMMER CAPACITOR**		
1	ECV1ZW 20×40		20PF
L	**INDUCTOR**		
1, 2	RFC		1mH
3	RFC		3.9mH

NB UNIT

PRINTED CIRCUIT BOARD PB-1582(A～Z)

Q	**FET & TRANSISTOR**		
3, 4, 6	FET	3SK40M	
2	〃	2SK19GR(JF-1033B)	
1, 5, 7, 8	Tr.	2SC372Y	
D	**DIODE**		
1～4	Ge.	1S188FM	
X	**CRYSTAL**		
1	HC-6/U		2725kHz
R	**RESISTOR/CARBON FILM**		
4, 5, 14, 22, 33	¼W		100Ω
15, 20	¼W		330Ω
3	¼W		390Ω
27	¼W		560Ω
10, 31, 32	¼W		1KΩ
7	¼W		2.2KΩ
8, 21, 23	¼W		3.3KΩ
1	¼W		4.7KΩ
30	¼W		5.6KΩ
13, 17	¼W		10KΩ
2, 6, 24	¼W		22KΩ
18	¼W		33KΩ
16, 29	¼W		47KΩ
9, 11, 12, 19, 25, 26	¼W		100KΩ
28	¼W		150KΩ
C	**CAPACITOR**		
	DIPPED MICA		
19	50WV		470PF
	CERAMIC DISC		
1	50WV		3PF(NPO)
11	50WV		18PF(NPO)
26	50WV		22PF(SL)
7, 25	50WV		27PF(SL)
12	50WV		51PF(SL)
9	50WV		100PF(NPO)
16	50WV		100PF(SL)
2	50WV		120PF(NPO)
24	50WV		270PF(SL)
20, 23	50WV		0.001μF
4, 8, 27, 28,	50WV		0.01μF
3, 10, 13～15, 17, 18	50WV		0.047μF
5	50WV		0.1μF
	ELECTROLYTIC		
6	16WV		1μF
21	16WV		10μF
TC	**TRIMMER CAPACITOR**		
1	ECV-1ZW 50×40		50PF
L	**INDUCTOR**		
2	RFC		250μH
1	RFC		1mH
T	**TRANSFORMER**		
120	R12-4129		
121, 122	#220067		
123	R12-4097		

FIX/RF PROCESS UNIT

PRINTED CIRCUIT BOARD PB-1534

Q	**IC, FET & TRANSISTOR**		
2	IC	TA7060P	
1, 3, 4, 6, 7	FET	2SK19GR	
5	TR	2SC372Y	
D	**DIODE**		
1	Si	1S1555	
2	Varactor	1S2236	
XF	**CRYSTAL FILTER**		
1	XF-30A		
XS	**CRYSTAL SOCKET**		
1	S-14	2P	
R	**RESISTOR**		
23	CARBON FILM	¼W	56Ω
2, 3, 5, 10, 15, 20, 24		¼W	100Ω
11		¼W	470Ω
7, 9		¼W	1KΩ
6, 16, 19		¼W	2.2KΩ
1, 4		¼W	3.3KΩ
8, 12, 14, 17		¼W	10KΩ
13, 18, 21, 22		¼W	100KΩ
VR	**POTENTIOMETER**		
1	V10K8-1-2		500B
2	V10K8-1-2		5KB
C	**CAPACITOR**		
26	DIPPED MICA	50WV	20PF
29		50WV	51PF
4	CERAMIC DICS	50WV	20PF(CH)
19		50WV	27PF(CH)
9, 15		50WV	100PF(CH)
1～3, 5～8, 10～14 16～18, 20, 22～25, 27, 28		50WV	0.01μF
21		50WV	0.047μF
TC	**TRIMMER CAPACITOR**		
1, 2	ECV-1ZW20X32		20PF
T	**TRANSFORMER**		
1～3	R 12-4424		
L	**INDUCTOR**		
1	RFC		250μH
2	RFC		270μH
3	FIX OUT		#00054

VFO UNIT

PRINTED CIRCUIT BOARD PB-1056(A～Z)

Q	**FET & TRANSISTOR**		
3	TR.	2SC372Y	
1, 2	FET	2SK19GR	

D	**DIODE**		
1	Varactor 1S2236		
R	**RESISTOR**		
4, 7	CARBON FILM	¼W	100Ω
10		¼W	270Ω
3, 6		¼W	330Ω
8		¼W	8.2KΩ
1		¼W	10KΩ
9		¼W	22KΩ
2, 5		¼W	100KΩ
11(L5)	CARBON COMPOSITION	½W	1KΩ
C	**CAPACITOR**		
16	DIPPED MICA	50WV	20PF
8, 10		50WV	100PF
1, 2		50WV	650PF
11※		50WV	1000PF
11		50WV	2000PF
6, 7, 9, 12, 15	CERAMIC DISC	50WV	0.01μF
3, 5, 13		500WV	0.01μF
14	CERAMIC TC	NP0	6PF
4		NP0	10PF
19		NP0	82PF
20		N750	2PF
18		N750	7PF
17		N750	20PF
VC	**VARIABLE CAPACITOR**		
1	AIR	B521A112	
TC	**TRIMMER CAPACITOR**		
1	AIR	TSN150C30PF	
2	AIR	TSN150C10PF×2	
L	**INDUCTOR**		
1	OSCILLATOR COIL		
2～4, 6, 7	RF CHOKE		250μH
5(R11)	RF CHOKE		
RECTIFIER UNIT			
PRINTED CIRCUIT BOARD PB-1076(A～Z)			
D	**DIODE**		
5, 6	Si.	1S1942	
1～4, 9～12	Si.	10D10	
7, 8	Si.	V06B	
R	**RESISTOR**		
6～13	CARBON FILM	¼W	470KΩ
4, 5	CARBON COMPOSITION	1W	3.3Ω
1		2W	5.6Ω
3	METALIC FILM	5W	220Ω
C	**CAPACITOR**		
6	CERAMIC DISC	50WV	0.047μF
4		500WV	0.01μF
1, 2, 5		1.4KV	0.0047μF
3	ELECTROLYTIC	25WV	470μF
MAIN CHASSIS			
V	**VACUUM TUBE**		
1		12BY7A	
2, 3		6JS6C	
Q	**TRANSISTOR**		
1, 2	TR.	2N4280	
D	**DIODE**		
4, 7	Ge.	1S1007	
1～3, 8, 11～13	Si.	1S1555	
14	Si.	1S1941	
9	Zener	WZ-090	
R	**RESISTOR**		
48	CARBON FILM	¼W	220Ω

22		¼W	330Ω
18		¼W	470Ω
26		¼W	560Ω
65, 68		¼W	1KΩ
50		¼W	1.5KΩ
70		¼W	3.3KΩ
23, 24, 33, 34		¼W	5.6KΩ
25		¼W	10KΩ
54	CARBON COMPOSITION	½W	10Ω
4, 9, 17, 39, 69		½W	56Ω
14, 51, 53, 55		½W	100Ω
16		½W	470Ω
35		½W	680Ω
7, 38, 66		½W	1KΩ
6, 67		½W	2.2KΩ
2		½W	3.3KΩ
44		½W	4.7KΩ
19, 20		½W	5.6KΩ
8		½W	10KΩ
36, 56		½W	33KΩ
3		½W	47KΩ
28, 29		½W	470KΩ
13		½W	1MΩ
10, 11		1W	56Ω
30	METALIC FILM	1W	47KΩ
5		3W	5.1KΩ
40		5W	1.5KΩ
37		5W	18KΩ
12	WIRE WOUND	METER SHUNT	
VR	**VARIABLE RESISTOR**		
3	EVKA2A10306	1KΩ B/10KΩ B	
6	EVHBOAS15B13	1KΩB	
1	EVKA2AF02314	5KΩA/1KΩB	
2	EVKA2AF01339	5KΩA/5KΩB	
4	TR-11R	500ΩB	
C	**CAPACITOR**		
123	DIPPED MICA	500WV	2PF
134		500WV	3PF
28		500WV	5PF
1, 16, 98, 107		500WV	10PF
44		500WV	20PF
97, 106, 122		500WV	30PF
5, 6, 10, 42, 43, 47		500WV	50PF
135		500WV	60PF
48, 53, 55, 92, 99		500WV	100PF
46, 111		500WV	150PF
29		500WV	200PF
4, 9, 127		500WV	250PF
41		500WV	270PF
45		500WV	300PF
105, 108		500WV	400PF
2, 26, 136		500WV	470PF
128, 129, 130		500WV	820PF
7, 27, 120, 121, 131		500WV	1000PF
17		500WV	2200PF
133		500WV	3000PF
13, 104	MOULDED MICA	1KWV	80PF
125		1KWV	100PF
11		1KWV	200PF
23		1.5KWV	1000PF
51, 62, 65, 81～83, 86, 87, 90, 118	CERAMIC DISC	50WV	0.01μF
33, 38, 50, 52, 59～61, 66, 69～73, 85, 89, 91, 94, 95, 100, 103		50WV	0.047μF
8, 14, 15, 20, 22		500WV	0.0047μF
3, 19, 21, 101, 102		500WV	0.01μF
74		1.4KV	0.001μF
24		1.4KV	0.0047μF
36, 75		1.4KV	0.01μF
25	(RDA30)	3KV	150PF
132		3KV	600PF
30～32, CERAMIC FEED THRU			

34, 35, 37, 39, 40, 67, 68, 84, 110		500WV	0.001μF
18	PLASTIC FILM	50WV	0.22μF
49		50WV	0.47μF
150	METALIZED PAPER	160WV	0.47μF
146	ELECTROLYTIC	16WV	1μF
54, 144		16WV	10μF
63		16WV	220μF
152		25WV	1000μF
151		315WV	10μF
109		450WV	2.2μF
77, 78		500WV	100μF
VC	**VARIABLE CAPACITOR**		
1	(PLATE)AIR	RT18B300VC	300PF
2	(LOADING)AIR	C123A129	
TC	**TRIMMER CAPACITOR**		
5		ECV1ZW10X32	10PF
1～4, 11～25		ECV1ZW50X32	50PF
7, 8, 9		MICA B-1PY	40PF
6, 31		B-2PY	100PF
10, 26, 28, 29		B-7P	420PF
27		AIR TSN-150C	10PF
30	PLASTIC FILM	CTY12B	10PF
L	**INDUCTOR**		
12, 13, 16～18, 20, 21, 26, 31, 35		RF CHOKE	250μH
3, 11, 36		RF CHOKE(TV-245)	250μH
9		RF CHOKE(PLATE)	300μH
7		RF CHOKE(PLATE)	500μH
2		RF CHOKE	1mH
24		P.S. ½W56Ω0.3φ10TS	
1, 4, 37		P.S. ½W56Ω0.6φ4TS	
5, 6		P.S. 1W56Ω1.0φ4TS	
8		TANK COIL	
22		TRAP COIL	
28		TRAP COIL	
29		TRAP COIL	
32		TRAP COIL	
33		TUNING COIL	
25		L. P. FILTER COIL	
14, 15		RF CHOKE	35μH
T	**TRANSFORMER & INDUCTOR**		
101A		ANT COIL A	
102		GRID COIL A	
103		DRIVER COIL A	
104		ANT COIL B	
105		DRIVER COIL B	
106		GRID COIL B	
107		5MHz TRAP COIL	
111		OSC COIL	
115		3.18MHz TRAP COIL	
T	**TRANSFORMER & CHOKE COIL**		
11		ROWER TRANSFORMER	
12		AF CHOKE 20m H 0.5A	
F	**FUSE**		
1		AC 5A(100～117V)3A(200～234V)	
2		DC 20A	
FH	**FUSE HOLDER**		
1		AC S-N1001	
2		DC S-N1102	
RL	**RELAY**		
1		AE3171-42	
2		MX2P	
S	**SWITCH**		
1	ROTARY	RS13-13-11(BAND)	
2	ROTARY	ESRE365R20Z(MODE)	
4	ROTARY	ESRE246R20Z(SELECT)	
6		SEESAW WD2101(POWER)	
5		SEESAW WD2301(HEATER)	

3, 10, 11		SLIDE SLE12201	
7～9		SLIDE SLE12301	
X	**CRYSTAL**		
1	80M	HC-25/U	9.52MHz
2	40M	HC-25/U	13.02MHz
3	20M	HC-25/U	20.02MHz
4	15M	HC-25/U	27.02MHz
5	10M-A	HC-25/U	34.02MHz
6	10M-B	HC-25/U	34.52MHz
7	10M-C	HC-25/U	35.02MHz
8	10M-D	HC-25/U	35.52MHz
9	AUX	HC-25/U	—
10	JJY/WWV	HC-25/U	16.02MHz
11	160M	HC-25/U	7.52MHz
MJ	**MULTI JACK**		
1, 2, 6		3305-018-011	18P
3, 4		3305-022-011	22P
5		3305-014-011	14P
7		3305-010-011	10P
PL	**LAMP**		
1, 2, 4		16V 0.15A	
3		14V 40mA	
5, 6		LED TLR-104	
PLH	**LAMP HOLDER**		
1, 2		#001011	
3		B-1	
J	**RECEPTACLE & JACK**		
1, 4, 5, 7, 8, 11, 16～18		CN-7017	
2		S-G7616(KEY)	
10		S-G7814(PHONE)	
3		FM-144(MIC)	
6		JSO-239(ANT)	
9		450AB12M(POWER)	
12		P2240(SP)	
13		S-B0611(EXT. VFO)	
14		SA602B(ACC)	
15		S-I6303(FAN)	
M	**METER**		
1		MK-45	

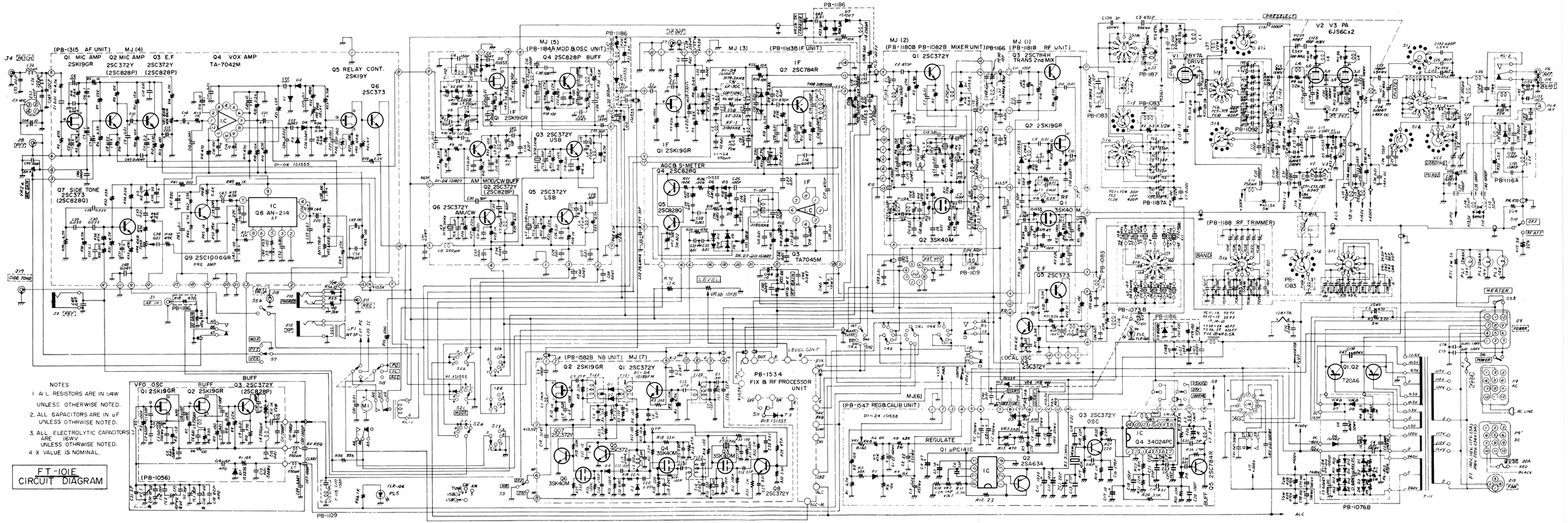
(PB-1315 AF UNIT) MJ (4)
Q1 MIC AMP 2SK19GR
Q2 MIC AMP 2SC372Y (2SC828P)
Q3 E.F 2SC372Y (2SC828P)
Q4 VOX AMP TA-7042M
Q5 RELAY CONT. 2SK19Y
Q6 2SC373
Q7 SIDE TONE 2SC373 (2SC828Q)
IC Q8 AN-214 AF
Q9 2SC1000GR PRE AMP
MJ (5) (PB-1184A MOD & OSC UNIT)
Q4 2SC828P BUFF
Q1 2SK19GR
Q3 2SC372Y USB
Q5 2SC372Y LSB
Q6 2SC372Y AM/CW
Q2 2SC372Y (2SC828P)
AGC & S-METER
Q4 2SC828Q
Q5 2SC828Q
MJ (3) (PB-1183B IF UNIT)
Q2 2SC784R
Q3 TA7045M
PB-1186
MJ (2) (PB-1180B PB-1082B MIXER UNIT) PB-1166
Q1 2SC372Y
Q2 3SK40M
MJ (1) (PB-1181B RF UNIT)
Q3 2SC784R TRANS 2nd MIX
Q2 2SK19GR
Q5 2SC373
LOCAL OSC Q3 2SC372Y
V1 12BY7A DRIVE
V2 V3 PA 6JS6CX2
(PB-1188 RF TRIMMER)
PB-1076B
PB-1534 FIX & RF PROCESSOR UNIT
MJ (7) (PB-1582B NB UNIT)
Q2 2SK19GR
Q1 2SC372Y
Q7 2SC372Y
Q5 2SC372Y
Q4 3SK40M
Q6 3SK40M
Q8 2SC372Y
MJ (6) (PB-1547 REGB CALIB UNIT)
REGULATE Q1 μPC141C
Q2 2SA634
Q3 2SC372Y OSC
Q4 34024PC
Q5 2SC784R BUFF
VFO OSC Q1 2SK19GR
BUFF Q2 2SK19GR
Q3 2SC372Y (2SC828P)
(PB-1056)
PB-1109
PB-1073B
PB-1083
PB-1092
PB-1187A
PB-1187
PB-1116A
HEATER
POWER
AC LINE
FUSE 20A
NOTES
1. ALL RESISTORS ARE IN 1/4W UNLESS OTHERWISE NOTED.
2. ALL CAPACITORS ARE IN uF UNLESS OTHRWISE NOTED.
3. ALL ELECTROLYTIC CAPACITORS ARE 16WV UNLESS OTHRWISE NOTED.
4. % VALUE IS NOMINAL.
FT-101E CIRCUIT DIAGRAM

Este manual original foi gentilmente cedido para ser digitalizado por PW8DFT Torres
Digitalizado em 24 de Novembro de 2020 por Alexandre "Tabajara" Souza, PU2SEX
http://www.tabalabs.com.br
http://tabajara-labs.blogspot.com
MANUAL DE DISTRIBUIÇÃO GRATUITA - Respeite o meu esforço de preservar a documentacao

YAESU