BLOCK DIAGRAM

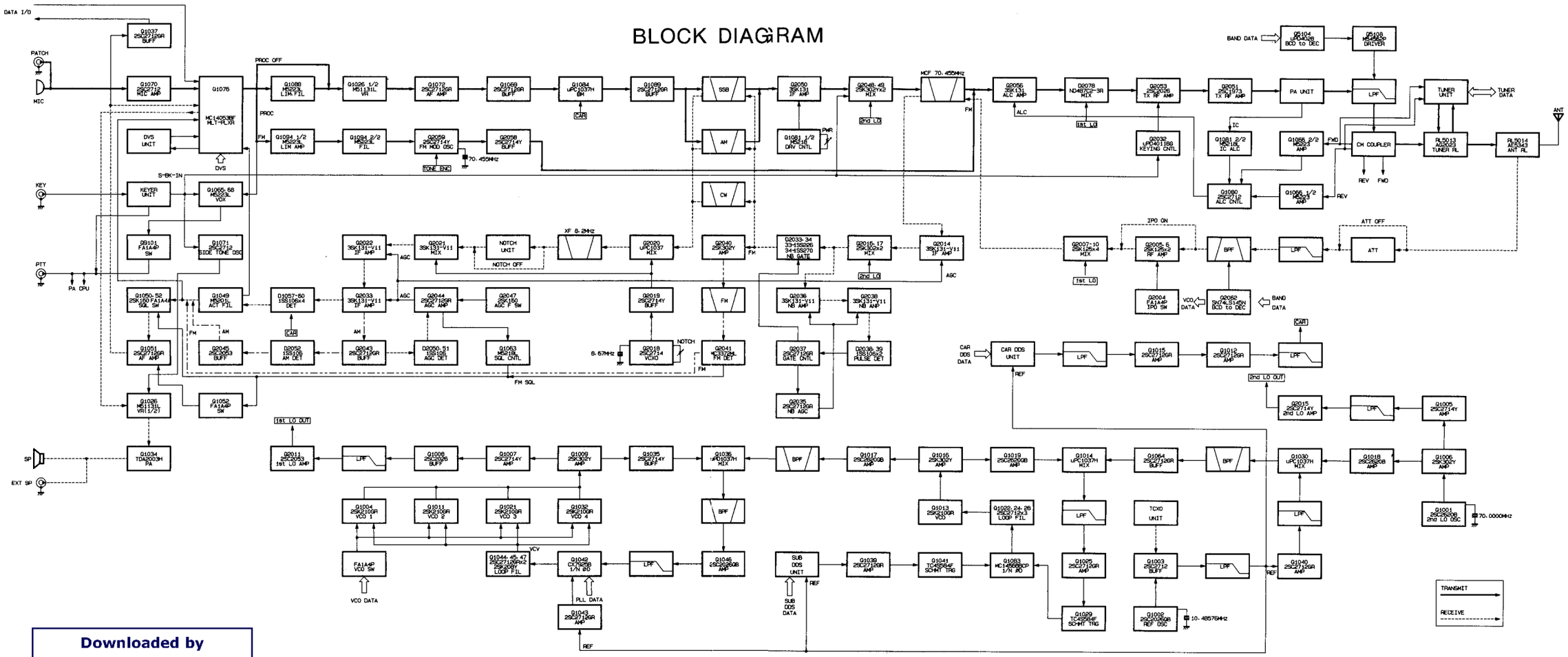

Downloaded by
RadioAmateur.EU

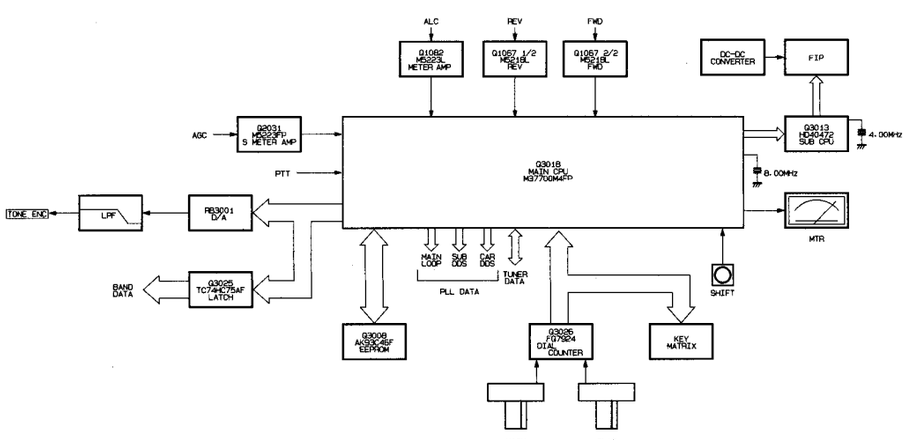

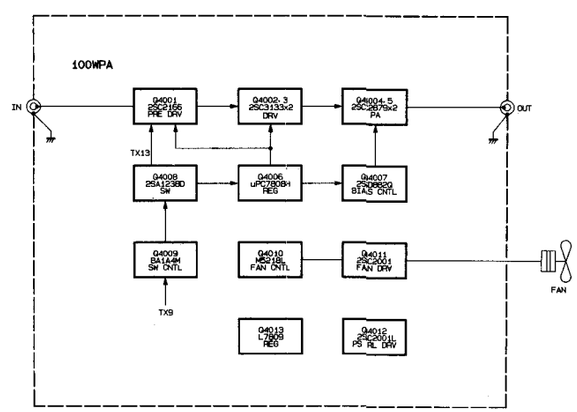

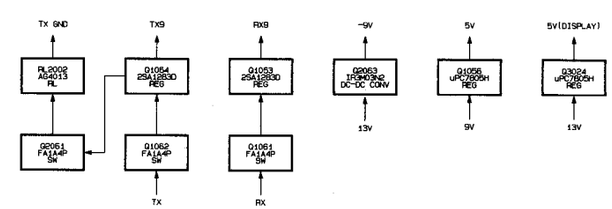

CONNECTION DIAGRAM

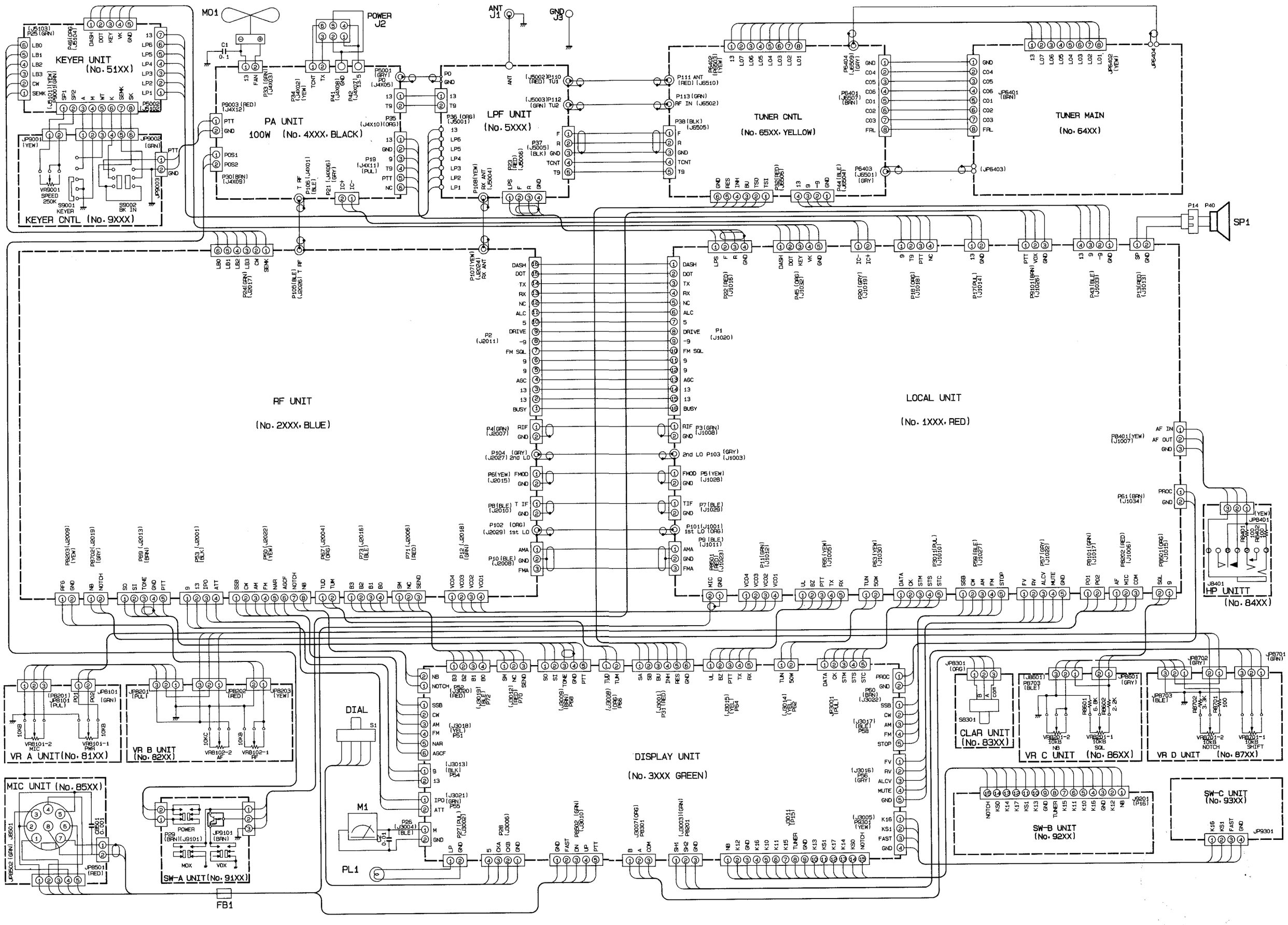

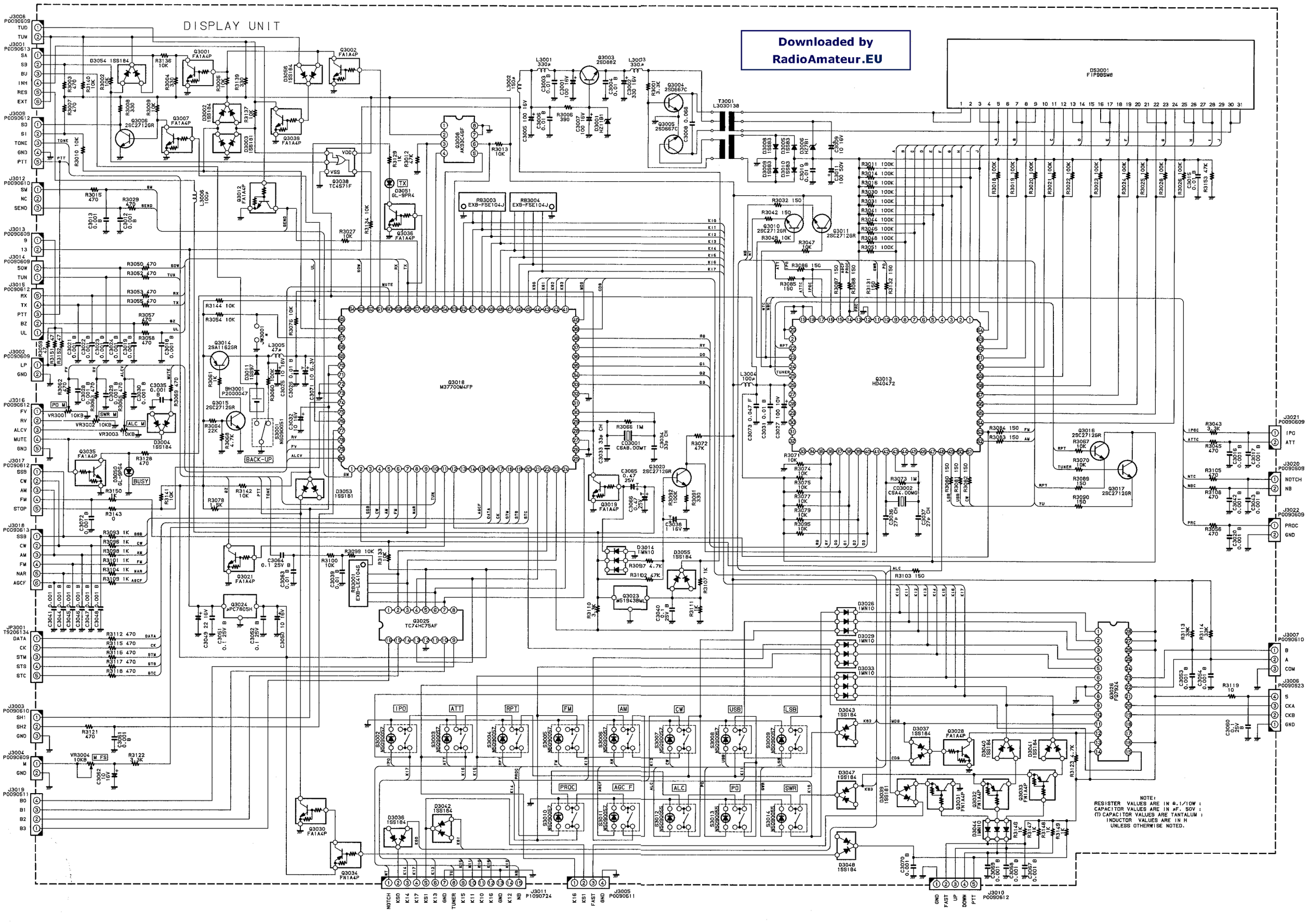

Downloaded by
RadioAmateur.EU

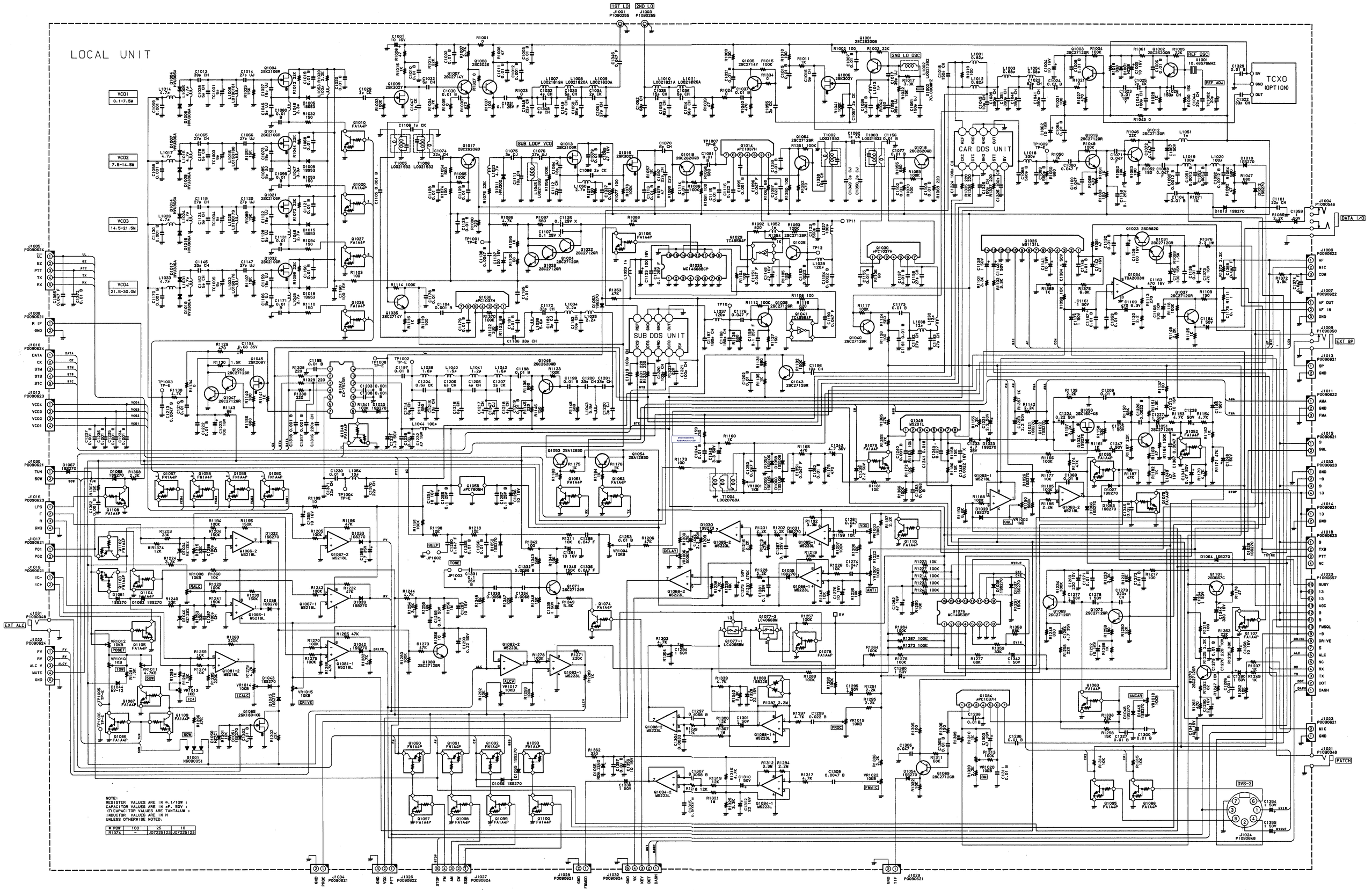
LOCAL UNIT
1ST LO
2ND LO
VCO1
0.1-7.5M
VCO2
7.5-14.5M
VCO3
14.5-21.5M
VCO4
21.5-30.0M
2ND LO OSC
REF OSC
REF ADJ
TCXO
(OPTION)
CAR DDS UNIT
SUB LOOP VCO
SUB DDS UNIT
DATA I/O
EXT SP
PATCH
EXT ALC
DVS-2
NOTE:
RESISTER VALUES ARE IN Ω,1/10W :
CAPACITOR VALUES ARE IN μF, 50V :
(T) CAPACITOR VALUES ARE TANTALUM :
INDUCTOR VALUES ARE IN H
UNLESS OTHERWISE NOTED.

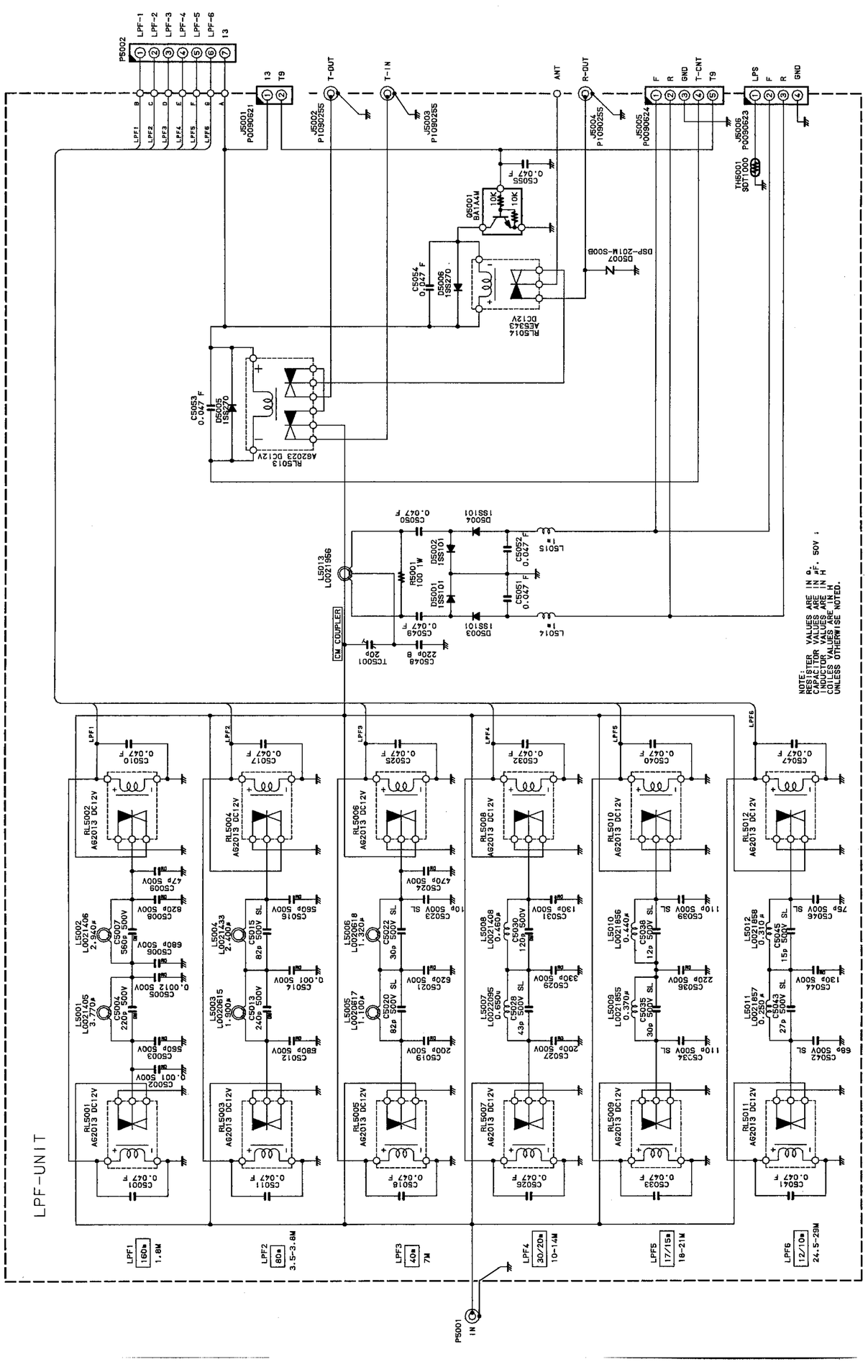
LPF-UNIT
NOTE:
RESISTER VALUES ARE IN Ω, 1/10W ;
CAPACITOR VALUES ARE IN μF, 50V ;
INDUCTOR VALUES ARE IN H
UNLESS OTHERWISE NOTED.
CW COUPLER
P5002
J5001 P0090621
J5002 P1090255
J5003 P1090255
J5004 P1090255
J5005 P0090624
J5006 P0090623
TH5001 SDT1000
RL5001 AG2013 DC12V
RL5002 AG2013 DC12V
RL5003 AG2013 DC12V
RL5004 AG2013 DC12V
RL5005 AG2013 DC12V
RL5006 AG2013 DC12V
RL5007 AG2013 DC12V
RL5008 AG2013 DC12V
RL5009 AG2013 DC12V
RL5010 AG2013 DC12V
RL5011 AG2013 DC12V
RL5012 AG2013 DC12V
RL5013 AG6023 DC12V
RL5014 AE5343 DC12V
LPF1 160a 1.8M
LPF2 80a 3.5-3.8M
LPF3 40a 7M
LPF4 30/20a 10-14M
LPF5 17/15a 18-21M
LPF6 12/10a 24.5-29M
P5001 IN

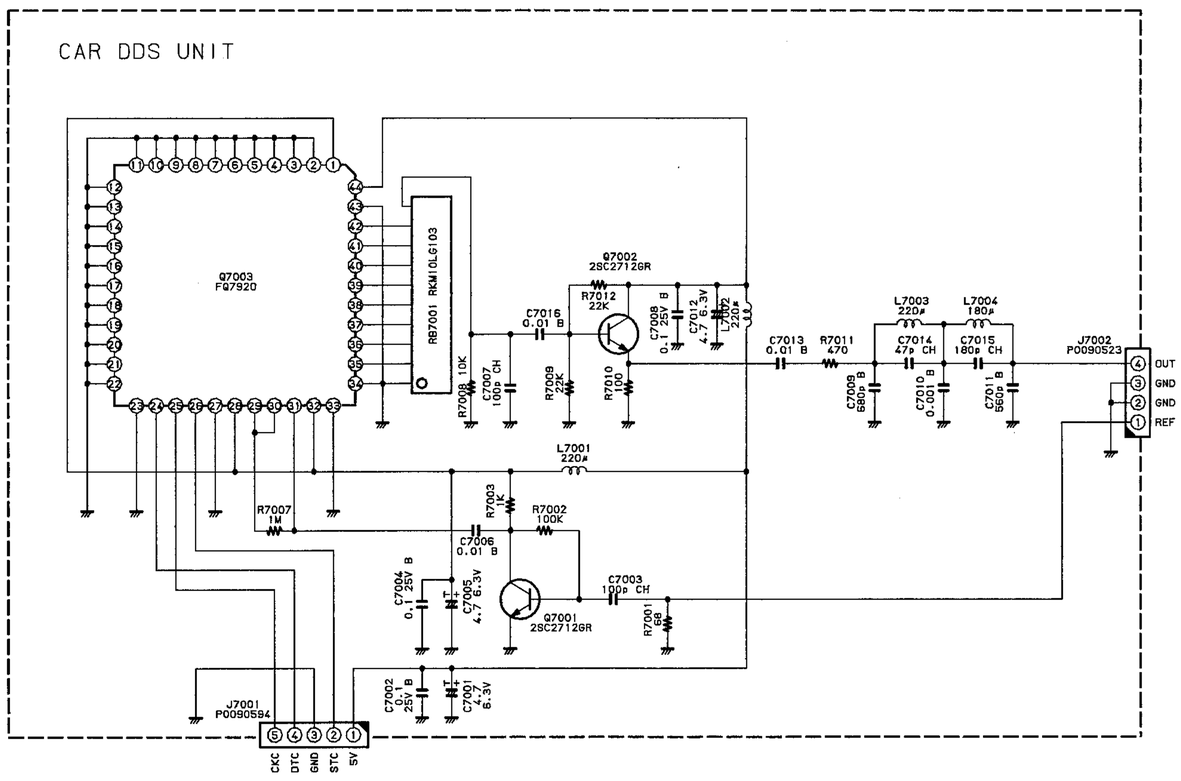
CAR DDS UNIT
Q7003 FQ7920
RB7001 RKM10LG103
Q7002 2SC2712GR
Q7001 2SC2712GR
J7001 P0090594
J7002 P0090523
OUT
GND
GND
REF
CKC
DTC
GND
STC
5V

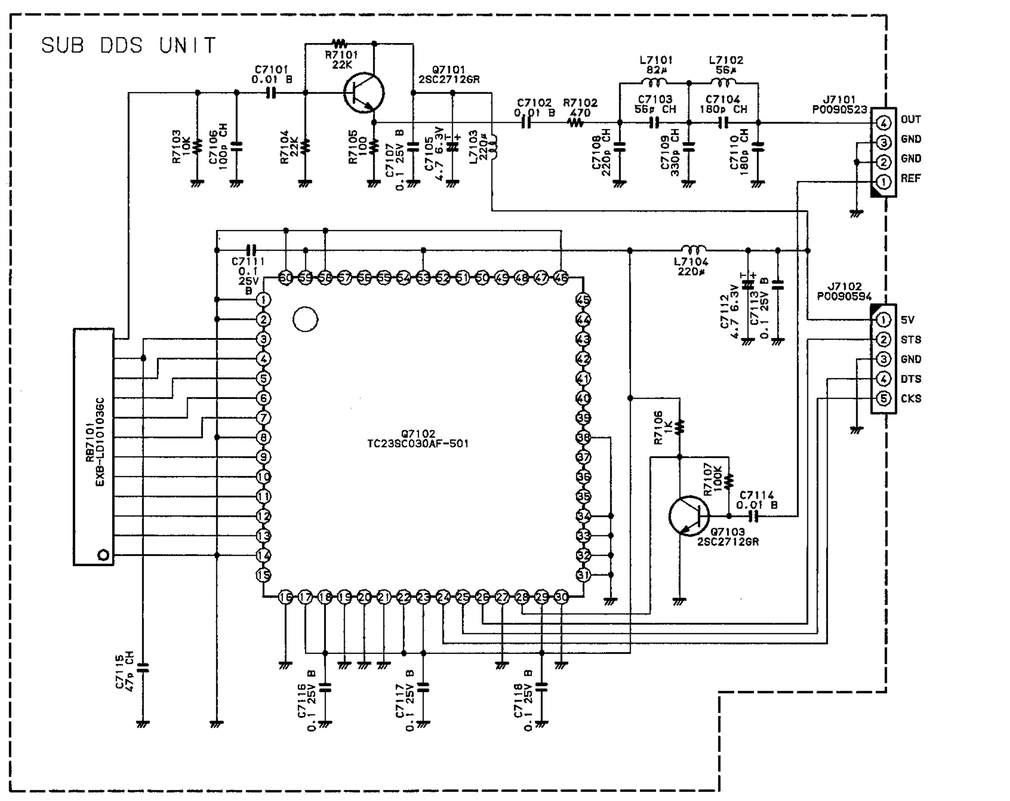
SUB DDS UNIT
Q7101 2SC2712GR
Q7102 TC23SC030AF-501
Q7103 2SC2712GR
RB7101 EXB-LD10103C
J7101 P0090523
J7102 P0090594
OUT
GND
GND
REF
5V
STS
GND
DTS
CKS

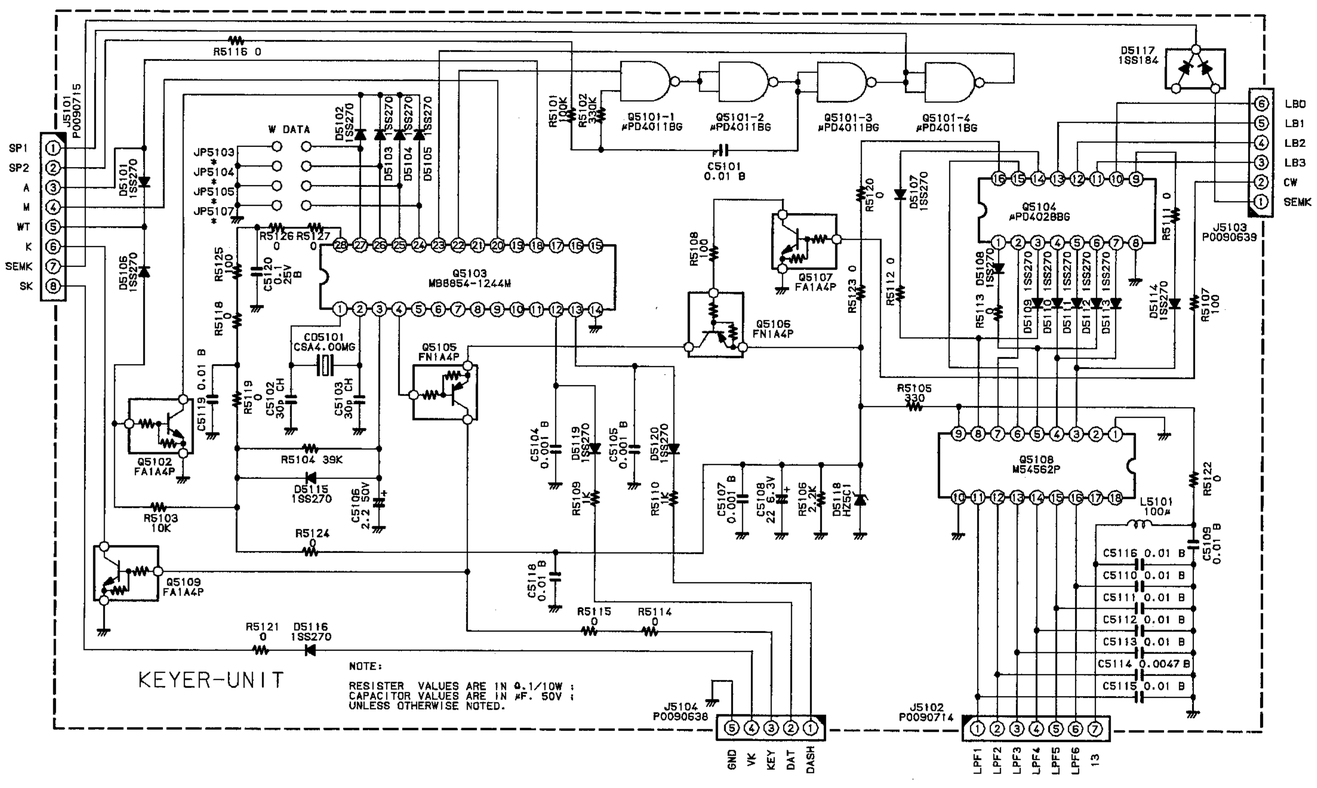
KEYER-UNIT
NOTE:
RESISTER VALUES ARE IN Ω, 1/10W ;
CAPACITOR VALUES ARE IN μF, 50V ;
UNLESS OTHERWISE NOTED.
J5101 P0090715
J5102 P0090714
J5103 P0090639
J5104 P0090638
Q5101-1 μPD4011BG
Q5101-2 μPD4011BG
Q5101-3 μPD4011BG
Q5101-4 μPD4011BG
Q5103 MB8854-1244W
Q5104 μPD4028BG
Q5108 M54562P
Q5102 FA1A4P
Q5105 FN1A4P
Q5106 FN1A4P
Q5107 FA1A4P
Q5109 FA1A4P
D5117 1SS184
SP1
SP2
A
M
WT
K
SEMK
SK
LB0
LB1
LB2
LB3
CW
SEMK
GND
VK
KEY
DAT
DASH
LPF1
LPF2
LPF3
LPF4
LPF5
LPF6
13

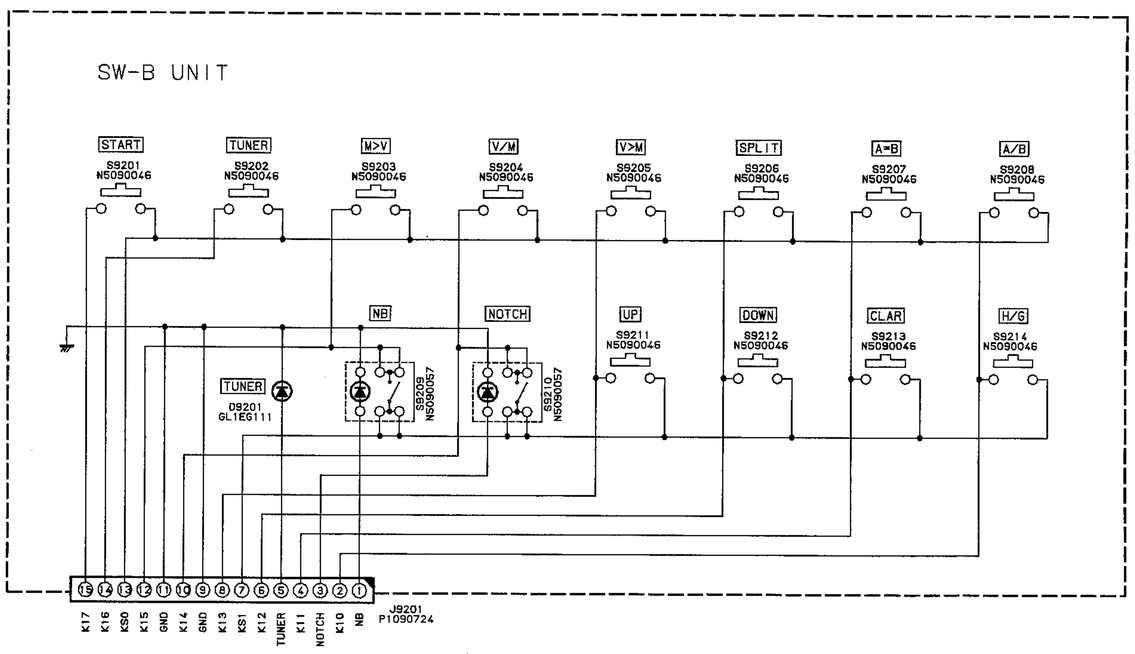
SW-B UNIT
START
TUNER
M>V
V/M
V>M
SPLIT
A=B
A/B
NB
NOTCH
UP
DOWN
CLAR
H/G
TUNER
D9201 GL1EG111
J9201 P1090724
K17
K16
KS0
K15
GND
K14
GND
K13
KS1
K12
TUNER
K11
NOTCH
K10
NB

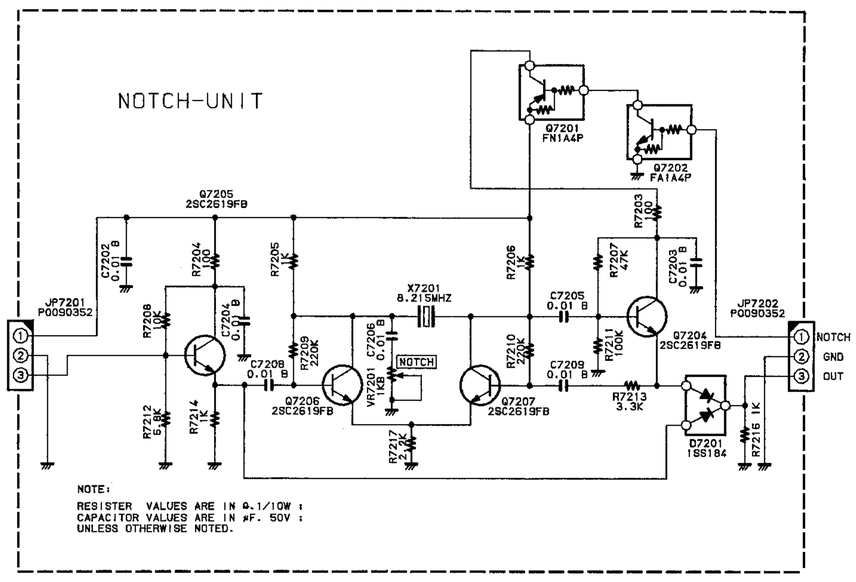
NOTCH-UNIT
Q7201 FN1A4P
Q7202 FA1A4P
Q7205 2SC2619FB
Q7206 2SC2619FB
Q7207 2SC2619FB
Q7204 2SC2619FB
X7201 8.215MHZ
JP7201 P0090352
JP7202 P0090352
D7201 1SS184
NOTCH
S
GND
IN
NOTCH
GND
OUT
NOTE:
RESISTER VALUES ARE IN Ω, 1/10W ;
CAPACITOR VALUES ARE IN μF, 50V ;
UNLESS OTHERWISE NOTED.

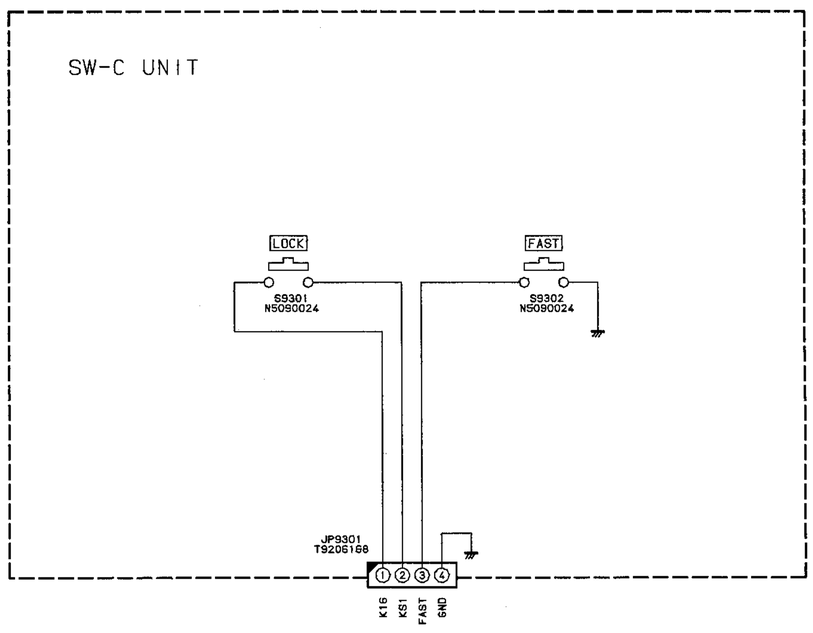
SW-C UNIT
LOCK
FAST
S9301 N5090024
S9302 N5090024
JP9301 T9206168
K16
KS1
FAST
GND

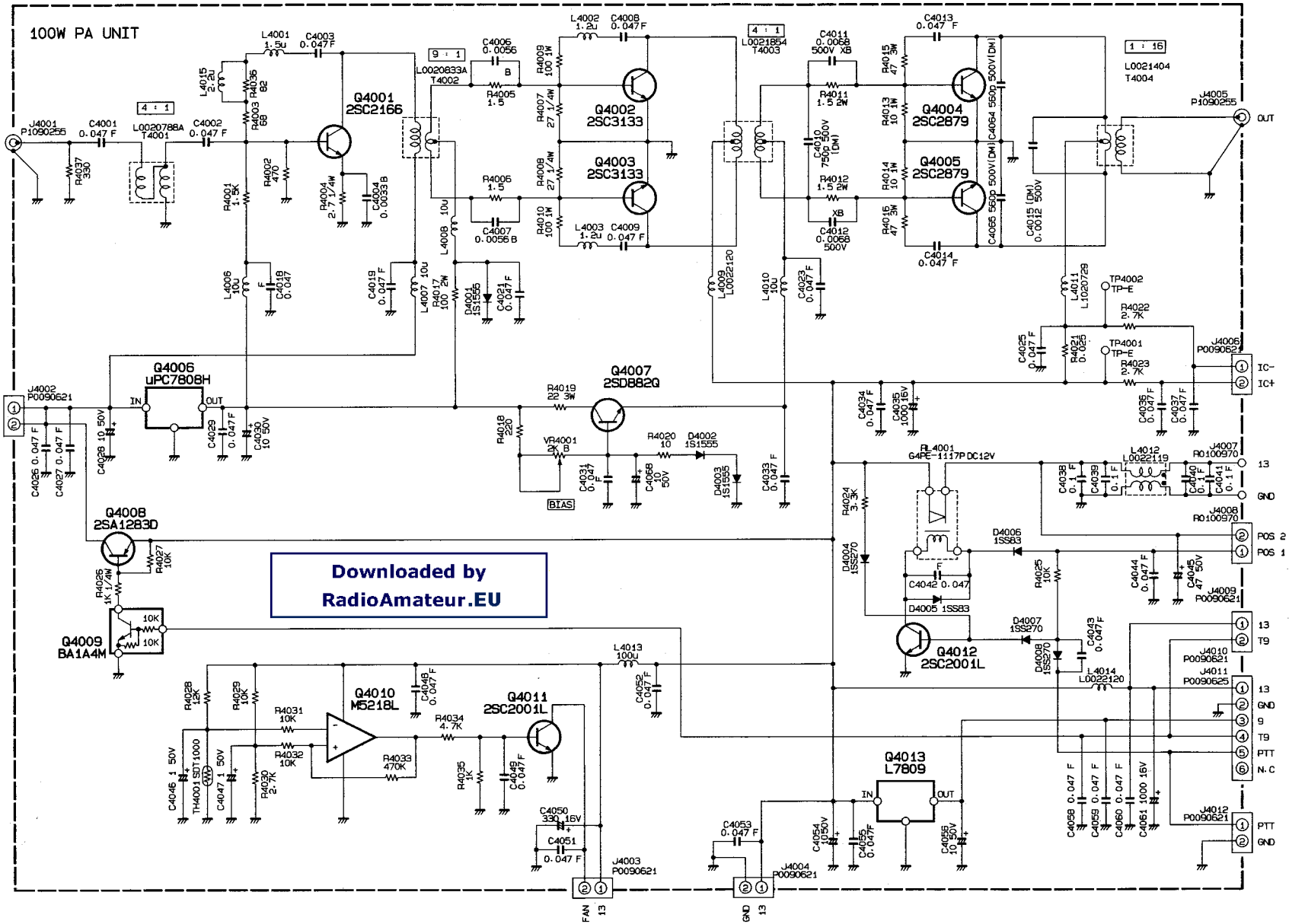
100W PA UNIT
IN
J4001 P1090256
C4001 0.047 F
L0020788A T4001
4 : 1
C4002 0.047 F
L4001 1.5u
C4003 0.047 F
L4015 22
R4003 68
R4005 82
Q4001 2SC2166
R4001 1.5K
R4002 470
R4004 2.7 1/4W
C4004 0.0033 B
R4037 330
L4006 10u
C4018 0.047
C4019 0.047 F
L4007 10u
R4017 100 2W
D4001 1S1555
C4021 0.047 F
9 : 1
L0020833A T4002
C4006 0.0056
B
R4005 1.5
C4007 0.0056 B
L4008 10u
L4002 1.2u
C4008 0.047 F
R4009 100 1W
R4007 27 1/4W
Q4002 2SC3133
Q4003 2SC3133
R4008 27 1/4W
R4010 100 1W
L4003 1.2u
C4009 0.047 F
4 : 1
L0021854 T4003
L4009 L0022120
L4010 10u
C4023 0.047 F
C4011 0.0068 500V XB
R4011 1.5 2W
C4010 750p 500V (DM)
R4012 1.5 2W
XB
C4012 0.0068 500V
C4013 0.047 F
R4015 47 3W
R4013 10 1W
Q4004 2SC2879
Q4005 2SC2879
R4014 10 1W
R4016 47 3W
C4014 0.047 F
C4064 560p 500V(DM)
C4065 560p 500V(DM)
C4015 (DM) 0.0012 500V
1 : 16
L0021404 T4004
J4005 P1090255
OUT
L4011 L1020729
TP4002 TP-E
R4022 2.7K
C4025 0.047 F
R4021 0.025
TP4001 TP-E
R4023 2.7K
J4006 P0090621
IC-
IC+
C4036 0.047 F
C4037 0.047 F
C4034 0.047 F
C4035 100 16V
Q4006 uPC780H
IN
OUT
J4002 P0090621
TCNT
TX
C4026 0.047 F
C4027 0.047 F
C4028 10 50V
C4029 0.047 F
C4030 10 50V
R4019 22 3W
Q4007 2SD882Q
R4018 220
VR4001 2K B
BIAS
C4031 0.047 F
R4020 10
D4002 1S1555
C4068 10 50V
D4003 1S1555
C4033 0.047 F
RL4001 G4PE-1117P DC12V
L4012 L0022119
J4007 R0100970
13
GND
C4038 0.1 F
C4039 0.1 F
C4040 0.1 F
C4041 0.1 F
J4008 R0100970
POS 2
POS 1
C4044 0.047 F
C4045 47 50V
R4024 3.3K
D4004 1SS270
D4006 1SS83
R4025 10K
C4042 0.047
D4005 1SS83
Q4012 2SC2001L
D4007 1SS270
C4043 0.047 F
D4008 1SS270
J4009 P0090621
13
T9
J4010 P0090621
J4011 P0090625
13
GND
9
T9
PTT
N.C
L4014 L0022120
Q4008 2SA1283D
R4027 10K
R4026 1K 1/4W
Q4009 BA1A4M
10K
10K
Downloaded by
RadioAmateur.EU
R4028 12K
R4029 10K
R4031 10K
R4032 10K
Q4010 M5218L
C4048 0.047 F
R4033 470K
R4034 4.7K
Q4011 2SC2001L
L4013 100u
C4052 0.047 F
C4046 1 50V
TH4001 SDT1000
C4047 1 50V
R4030 2.7K
R4035 1K
C4049 0.047 F
C4050 330 16V
C4051 0.047 F
J4003 P0090621
FAN
13
Q4013 L7809
IN
OUT
C4053 0.047 F
C4054 1050V
C4055 0.047F
C4056 10 50V
J4004 P0090621
GND
13
C4058 0.047 F
C4059 0.047 F
C4060 0.047 F
C4061 1000 16V
J4012 P0090621
PTT
GND

RF UNIT

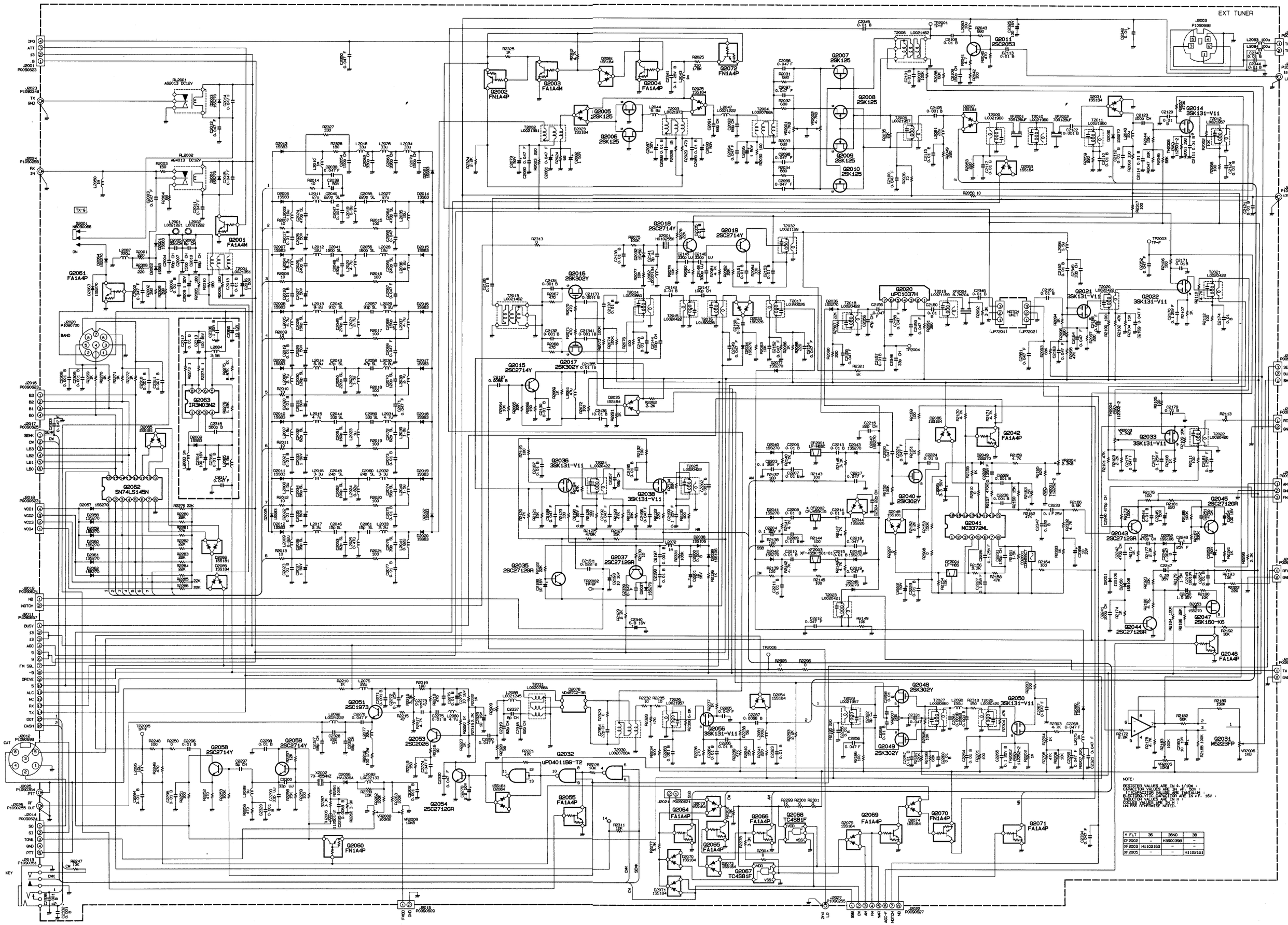

* FLT	36	36N0	38
CF2002	–	H3900398	–
XF2003	H1102163	–	–
XF2005	–	–	H1102181

TUNER CONTROL UNIT

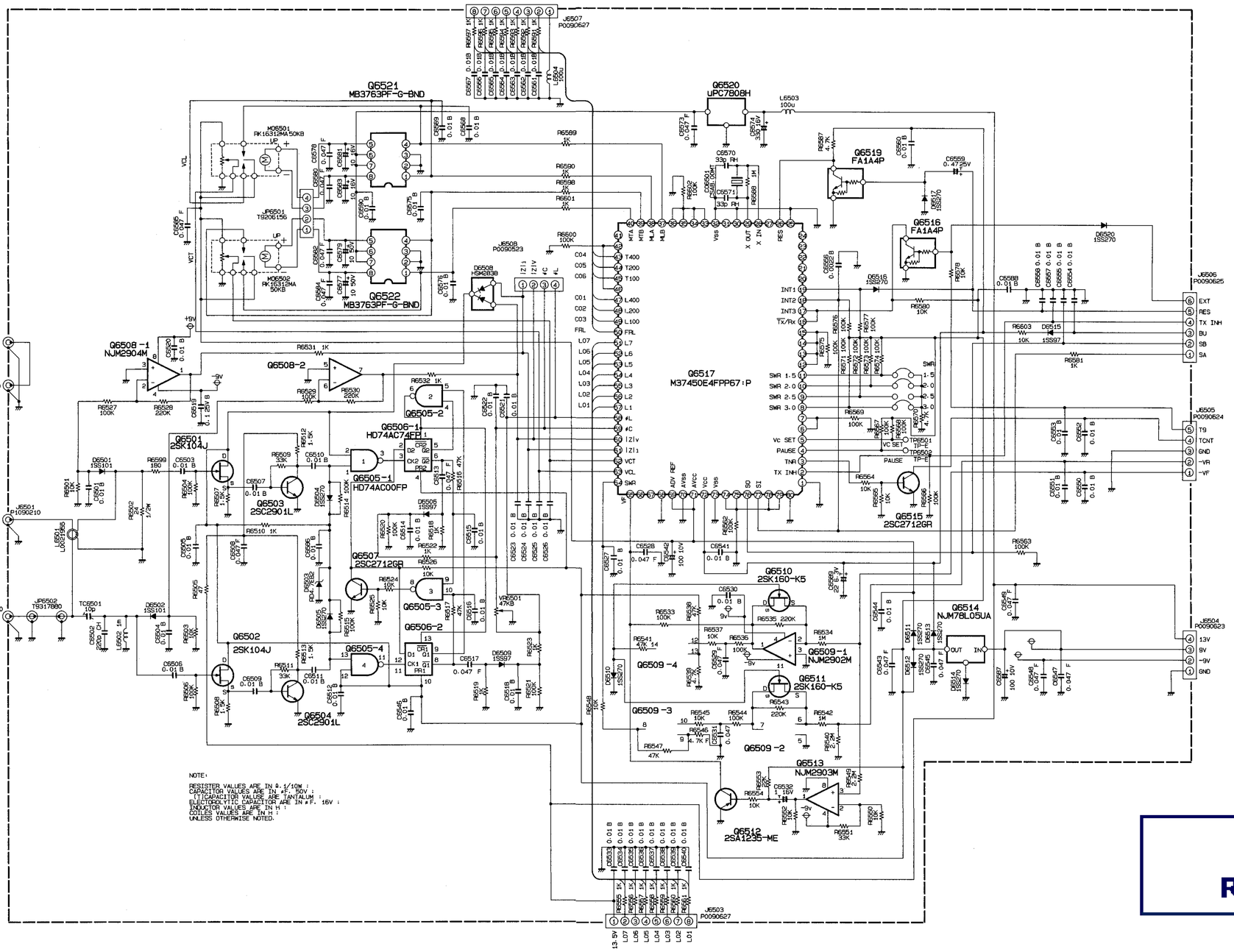

Downloaded by
RadioAmateur.EU
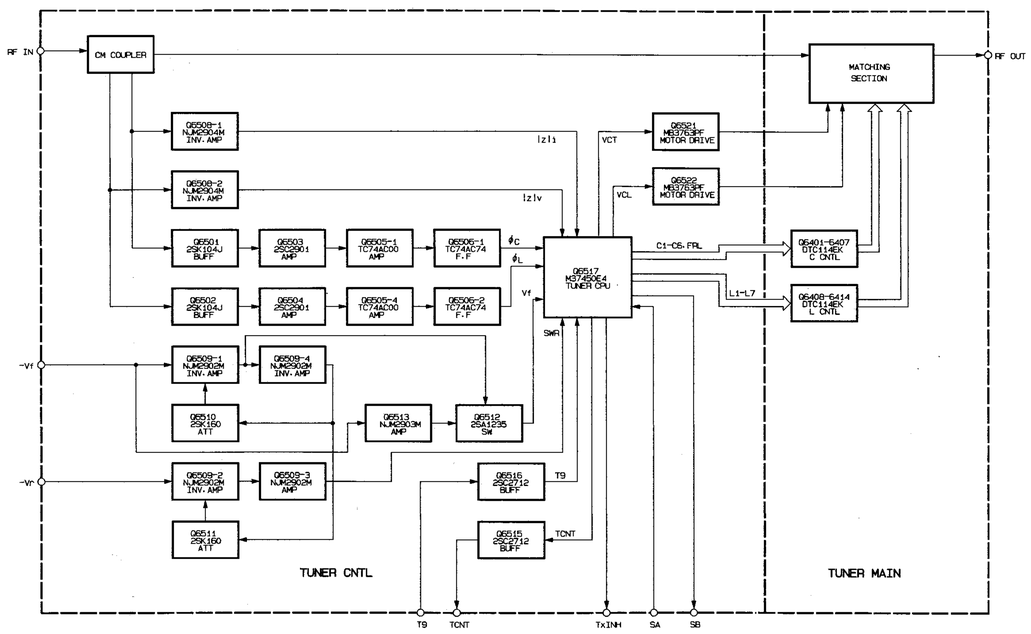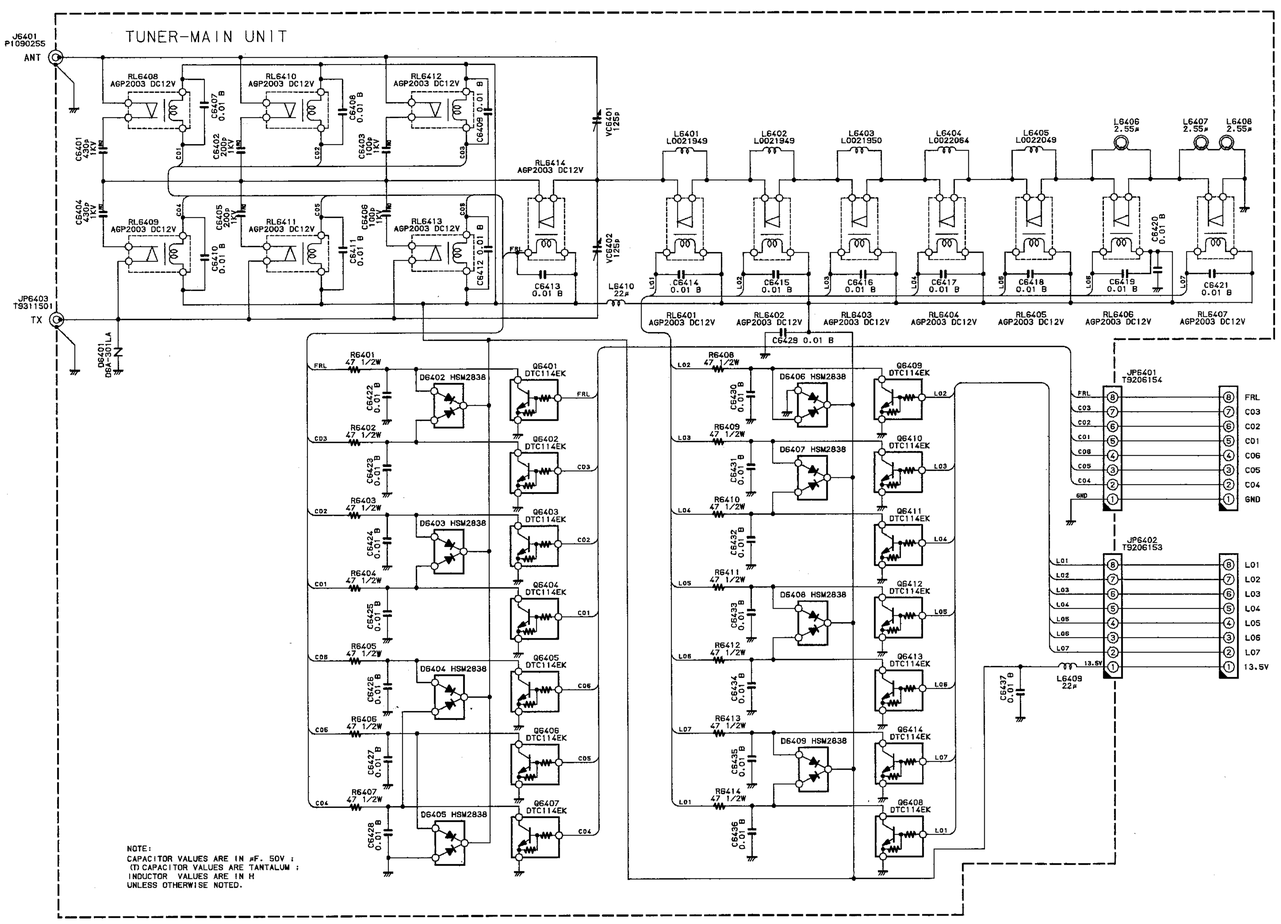
TUNER BLOCK DIAGRAM